CABIN SUPERCHARGER AND HEATING
SYSTEM

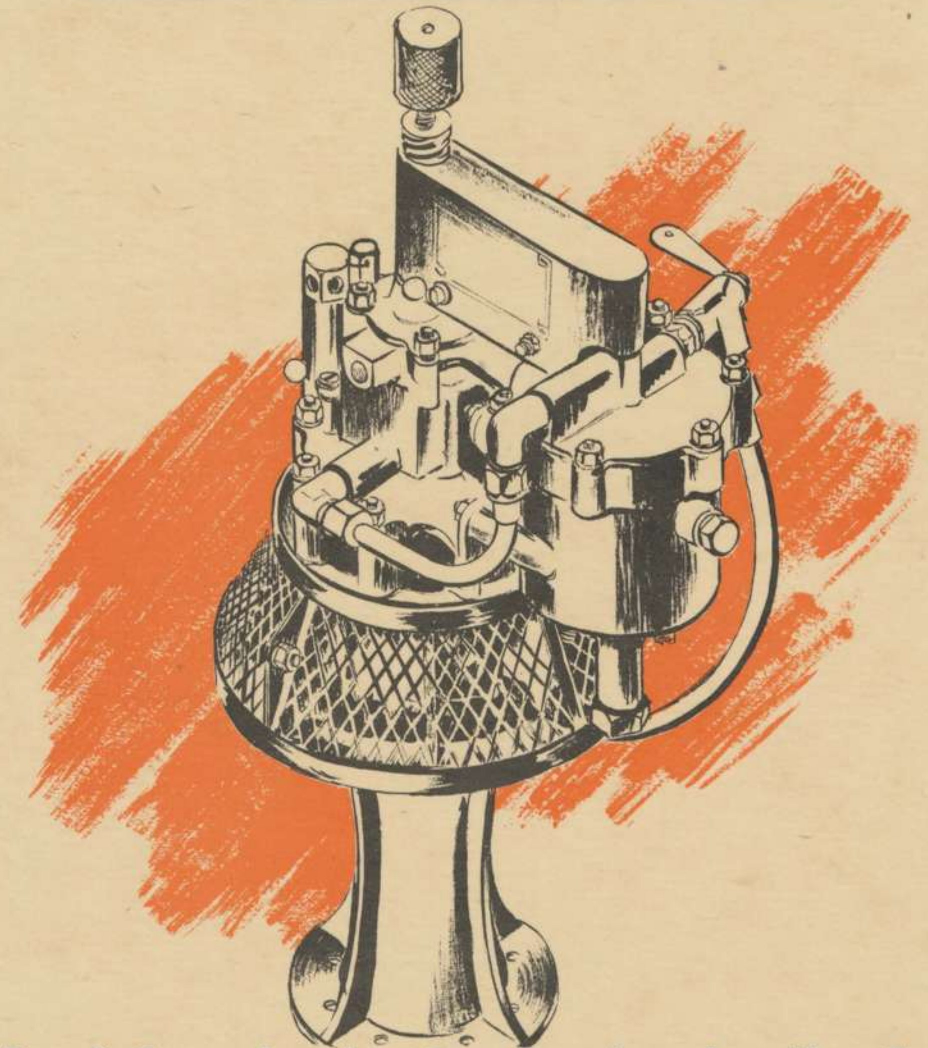

B-29 AIRPLANE

CABIN SUPERCHARGER
AND HEATING SYSTEM

CABIN SUPERCHARGING AND HEATING

TABLE OF CONTENTS

CABIN SUPERCHARGING AND HEATING

GENERAL DESCRIPTION: The cabin supercharging and heating system also performs the functions of ventilating and defrosting. On early B-29 airplanes, the cabin supercharging air is supplied to the cabin from engine-driven superchargers and on later airplanes from the turbosupercharging systems.

The design of the airplane is such that the personnel areas can be sealed and the air pressure increased above atmospheric. The predetermined pressure is maintained inside the airplane cabin by regulating the rate of air discharged. This is done automatically by two cabin pressure regulators. A manually-controlled pressure relief valve is provided for the engineer to use in case of failure of the pressure regulators. Suitable safety devices are also included to provide immediate release of cabin pressure.

Air entering the airplane cabin is cooled or heated to proper temperature and uniformly distributed throughout the cabin to maintain proper comfort for the crew. Two internal combustion heaters and two heat transfer units, or aftercoolers, automatically regulate cabin temperature. Heaters and aftercoolers are thermostatically-controlled to either warm or cool the air delivered by the cabin supercharger before it is introduced into the cabin.

Window defrosters are supplied heated air from the low pressure duct system within the airplane cabin. Small auxiliary blowers direct heated air through outlets across the sighting domes.

The cabin pressure and the quantity of ventilating air circulated through the cabin are controlled independently of each other except for the limitation each system imposes on the other. Cabin pressure is maintained at the desired level by controlling the discharge rate of the cabin air into the atmosphere. Air flow is regulated by controlling the rpm of the cabin supercharger. The cabin pressure regulators adjust themselves to accommodate the air flow from the cabin superchargers and maintain the desired cabin pressure.

The general arrangement of the system is shown in the facing diagram. There are two independent, but essentially identical, systems installed on opposite sides of the airplane. There are two superchargers, one in each inboard nacelle. Air is supplied from the ram air inlet duct to the engine-driven supercharger mounted in each inboard nacelle.

The supercharger discharges the air into a high pressure duct. The air in the duct continues through a venturi, a surge control valve and a fire valve, all located in the nacelle. From the nacelle, the high pressure duct leads along the wing front spar to the aftercooler located in the leading edge of the wing between the inboard nacelle and the body. From the after-

NOTES

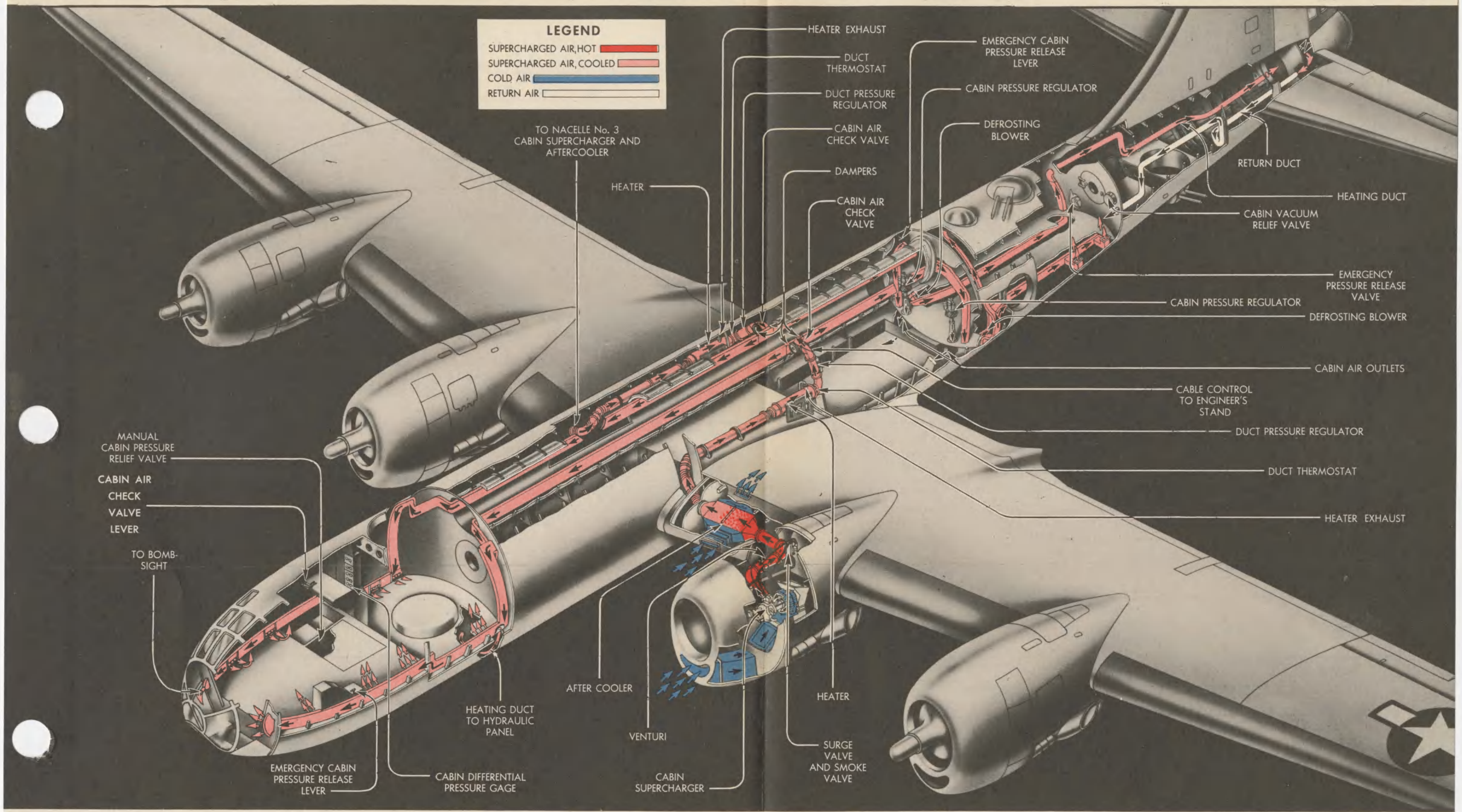

CABIN SUPERCHARGING AND HEATING SYSTEM

NOTES

cooler, the duct carries the air into the body, and aft above the wing to the heater mounted on the upper surface of the wing center section. From the heater, the high pressure duct runs up to the duct pressure control and the emergency shut-off valve and into the tunnel. Here it connects with the low pressure ducting system. The low pressure ducting system distributes the air to various parts of the airplane.

The engine-driven cabin supercharger is a two-stage centrifugal compressor. Its rpm is automatically controlled by a regulator, mounted on the compressor to provide a constant air flow at the rate of 28 pounds per minute. This rate of flow is maintained until the compressors reach their maximum operating capacity at an altitude of about 30,000 feet. Above this altitude, the output of the cabin compressors decreases.

After leaving the compressor, the air passes through a flow control venturi. The purpose of the venturi is to measure the rate of air flow. The air pressures at the entrance and at the throat of the venturi are obtained. The difference in the two pressures is a measure of the quantity of air flowing through the venturi. The venturi entrance and throat pressures are then transmitted to the regulator on the supercharger which automatically varies supercharger speed to maintain a constant flow of air. When the air flow decreases, the pressure difference decreases. This decrease in pressure difference is transmitted to the supercharger regulator which automatically increases the impeller rpm to increase the air flow. Similarly, if the air flow becomes too great, the impeller rpm is reduced.

The surge control valve, located in an elbow of the duct inside the nacelle, prevents sudden surges (erratic operation) of the compressor. A characteristic of all centrifugal air compressors is that for stable operation, a certain minimum air flow is required. However, at the upper altitude limits of the supercharging system, unstable operating conditions are encountered when the supercharger is unable to maintain the required minimum air flow against a cabin pressure differential of $6\frac{1}{2}$ pounds per square inch. Conditions of unstable operation may occur at other altitudes when engine speed (i.e. supercharger impeller speed) is inadequate to maintain the minimum air flow. When the air flow drops below the required minimum, the surge control valve relieves the duct pressure, allowing an increase in air flow to keep the supercharger from surging.

The surge control valve contains a control diaphragm connected on one side to the pressure line from the venturi entrance, and on the other side to the venturi throat pressure line.

A low pressure differential acting on this diaphragm causes the surge valve to relieve before air flow in the system becomes too low for stable supercharger operation.

A fire control valve of the butterfly type is located in the same duct elbow, but downstream of the surge control valve. It is spring-loaded and is held open by a fusible metal plug protruding into the duct. The plug, which has a melting point of approximately 700 degrees Fahrenheit, melts in case of fire in the nacelle, allowing the spring to close the valve. This prevents smoke or fumes from entering the cabin through the duct.

The aftercooler is mounted in the leading edge of the wing, between the nacelle and the body. Cooling air enters through an opening in the leading edge of the wing, passes through the aftercooler and escapes through a slot in the top of the leading edge of the wing. Cabin air flows through five rectangular tubes at right angles to the flow of cooling air which flows over the outside surface of these tubes. The cooling area of the tubes is increased by fins both inside and outside the tubes. The flow of cooling air is controlled by a damper in the inlet operated by an electric motor.

The control motor is mounted beneath the aftercooler and is regulated by a thermostat inside the cabin.

From the aftercooler, the air flows into the body and to the gasoline-fired cabin heaters installed on the upper surface of the wing center section.

Each heater is a self-contained unit consisting of a combustion chamber in which the fuel is fired, and the necessary controls to start, stop, and vary the heat output. Each heater has a rated capacity of 80,000 B.T.U. per hour at sea level. Fuel for each heater is taken from the inboard engine fuel supply and is carried along the forward side of the wing front spar by a 1/4-inch aluminum alloy tube. This heater fuel line is connected to an elbow in the main engine fuel line between the fuel tank fitting and the main fuel shut-off valve, so that operation of the engine fuel shut-off valve does not affect the heater fuel supply.

The fuel shut-off valve for the heater fuel supply is solenoid-operated, and is located in the heater fuel line on the front spar between the take-off from the engine fuel line and the body, inboard of the aftercooler. The valve is operated by an electrical circuit through the heater control so that it is open only while the heater is in operation.

The air for the heater carburetor is tapped from the duct before the air passes through the heater. Heater exhaust gases are discharged to the atmosphere through the side of the body by means of a stainless steel tube one inch in diameter.

A pressure regulator in the cabin air duct provides the minimum pressure differential of 6 inches of mercury between the carburetor inlet and exhaust necessary for proper combustion in the heater. Thus, the heater can operate at any altitude between sea level and 40,000 feet. The pressure regulator employs a butterfly valve to maintain proper duct pressure when necessary by restricting the flow of air to the cabin ventilating system. This action will ordinarily occur only at altitudes below 16,000 feet.

An emergency shut-off valve, located in the cabin air duct just before it enters the tunnel, serves a double purpose. In normal operation, it acts as a check valve to prevent any reverse flow of air through the ventilating duct, such as would otherwise occur when an inboard engine is stopped. In an emergency, the valve may be closed manually to shut off fumes or smoke which might reach the cabin through the duct. To close the valves, cables run forward along the sides of the airplane to the two EMERGENCY CABIN AIR VALVE levers on the engineer's control stand. The cables should be rigged to a tension of 40 (plus or minus 10) pounds.

The airplane has three pressurized compartments. The forward pressurized compartment extends from the nose to pressure bulkhead number 218 at the forward end of the bomb bay. The aft pressurized compartment extends from pressure bulkhead number 646 at the rear of the aft bomb bay to pressure bulkhead number 834 just forward of the rear main entrance door. The tail gunner's pressurized compartment extends from station number 1110 to the tail of the airplane, exclusive of the tail gun turret.

The two main pressurized compartments are connected by a tunnel along the top of the bomb bays. This tunnel is also pressurized and serves as a means of crew transfer as well as a passageway for various tubing lines, electrical wiring and air ducts. No tunnel is provided to the tail gunner's compartment.

Each pressure bulkhead has an access door which opens inward. It can be opened only when there is no pressure in the compartments. Each compartment is lined with fabric-covered kapok to reduce heat loss through the structure, and to lower the noise level in the occupied areas. Bulkhead doors, escape hatches, and gun turret covers are sealed by means of D section neoprene rubber tubing cemented to the doors and covers.

All seams in the skin of the body and in the pressure bulkheads are sealed by means of zinc chromate-impregnated tape. Other sealed joints, such as stringer laps and joggled structural connections, are sealed with zinc chromate putty. Control cables passing through pressure bulkheads have seals of synthetic rubber.

The maximum allowable rate of air leakage from the airplane cabin at the time of delivery is 200 cubic feet per minute at standard sea level conditions, with a cabin pressure differential of 6½ pounds per square inch. This leakage is expected to increase slightly after the airplane has been in service. Pressure tightness of the cabin must be maintained by periodically servicing all air seals, structural seams, and joints.

The structure of the airplane is designed to withstand an internal pressure of 20 pounds per square inch. Each pressurized compartment is proof-tested to 10 pounds per square inch during the process of checking cabin leakage. The normal operating pressure differential above 30,000 feet, as regulated by the cabin pressure regulator, is 6½ pounds per square inch.

The low pressure air distribution system actually begins at the high pressure duct connection to the tunnel. From each high pressure duct, low pressure ducts lead fore-and-aft through the communicating tunnel.

After leaving the tunnel, the ducts to the forward compartment follow the body skin down and along each side of the airplane, just above the floor. Four openings in each duct, spaced between the rear pressure bulkhead and the pilot's and co-pilot's instrument panels distribute air uniformly. These openings are factory-set and should not require adjustment. The forward end of each duct has a fan-shaped opening which blows air over the nose windows, keeping them free of moisture. A small tube tapped from the air duct near the navigator's cabinet, furnishes warm air to the hydraulic panel under the floor.

The low pressure ducts leading aft to the rear pressurized compartment extend down around the pressure bulkhead to each side, and aft under the floor. Air is taken from each duct opposite the gun sighting blisters to provide warm air for the blisters. Electric motor-driven centrifugal blowers in the defrosting ducts direct the warm air through fan-shaped openings at the gun sighting stations. The duct and blower on the right side of the airplane supply air to the right gun sighting station, while the duct and blower on the left side of the airplane supply air to both the left and the upper gun sighting stations.

Both main ducts continue under the floor to the rear of the rear pressurized compartment. Here the duct on the right side connects with an air duct leading to the tail gunner's compartment. The duct on the left side feeds air to two heat outlets, on the floor under the bunks. From the tail section, air is returned to the rear pressurized compartment through a separate air duct along the left side of the airplane.

Ventilating air escapes to the bomb bay through two pressure regulators in the aft pressurized compartment. The regulators are mounted on the floor near the forward pressure bulkhead, one on each side of the bulkhead entrance door. The regulators are fully automatic and maintain proper pressure in the compartments by varying the amount of air escaping to the outside atmosphere.

From sea level to 8,000 feet, the regulators allow free air flow so that the pressure inside the airplane is the same as that outside. Consequently, there is no cabin supercharging below 8,000 feet which corresponds to an absolute pressure of 22.22 inches of mercury. This absolute pressure is maintained inside the cabin until the pressure differential between the inside and outside atmosphere reaches 13.34 inches of mercury, usually at an altitude of about 30,000 feet. At altitudes above 30,000 feet, the pressure differential remains at 13.34 inches of mercury until the superchargers reach their critical altitude.

An emergency pressure release valve is provided to relieve the cabin pressure instantaneously so that any of the exit doors may be opened, even though both superchargers are delivering their full capacity. This valve is on the rear bulkhead of the rear pressurized compartment and is tripped by an emergency release cable system. The release cable runs forward along the right side of the airplane to an emergency release handle mounted on the forward pressure bulkhead in the aft pressurized compartment. An extension of this cable continues along the right side of the airplane through the bomb bays and terminates at another emergency release handle on the pilot's control stand. The color coding of the release cable is brown-red-brown.

During rapid descent with the superchargers inoperative, the pressure outside the airplane might exceed the pressure in the cabin. To avoid this, a vacuum relief valve is mounted in the rear pressure bulkhead of the aft pressurized compartment. The valve is of the flapper type and is lightly spring-loaded. It will open if outside pressure should exceed cabin pressure, allowing air to flow into the pressurized compartments.

The cabin heaters and aftercoolers are electrically-controlled with a control switch for each system mounted on the side of the airplane just above the engineer's control panel. When these switches are in the OFF position, the temperature of the air delivered to the cabin by the compressor is not controlled. When the switches are ON, the temperature of the air is thermostatically controlled to maintain a cabin temperature of 70 degrees Fahrenheit until the outside temperature reaches approximately —40 degrees Fahrenheit. When the outside temperature is below —40 degrees Fahrenheit, there is a corresponding decrease in cabin air temperature. The cabin air thermostats which control both the heater and the aftercooler dampers are mounted on the engineer's auxiliary instrument panel.

A pressure warning switch behind the engineer's panel is set to sound warning horns in the three compartments when the pressure in the cabin corresponds to an altitude of approximately 12,000 feet. (See the ELECTRICAL SYSTEM Section.)

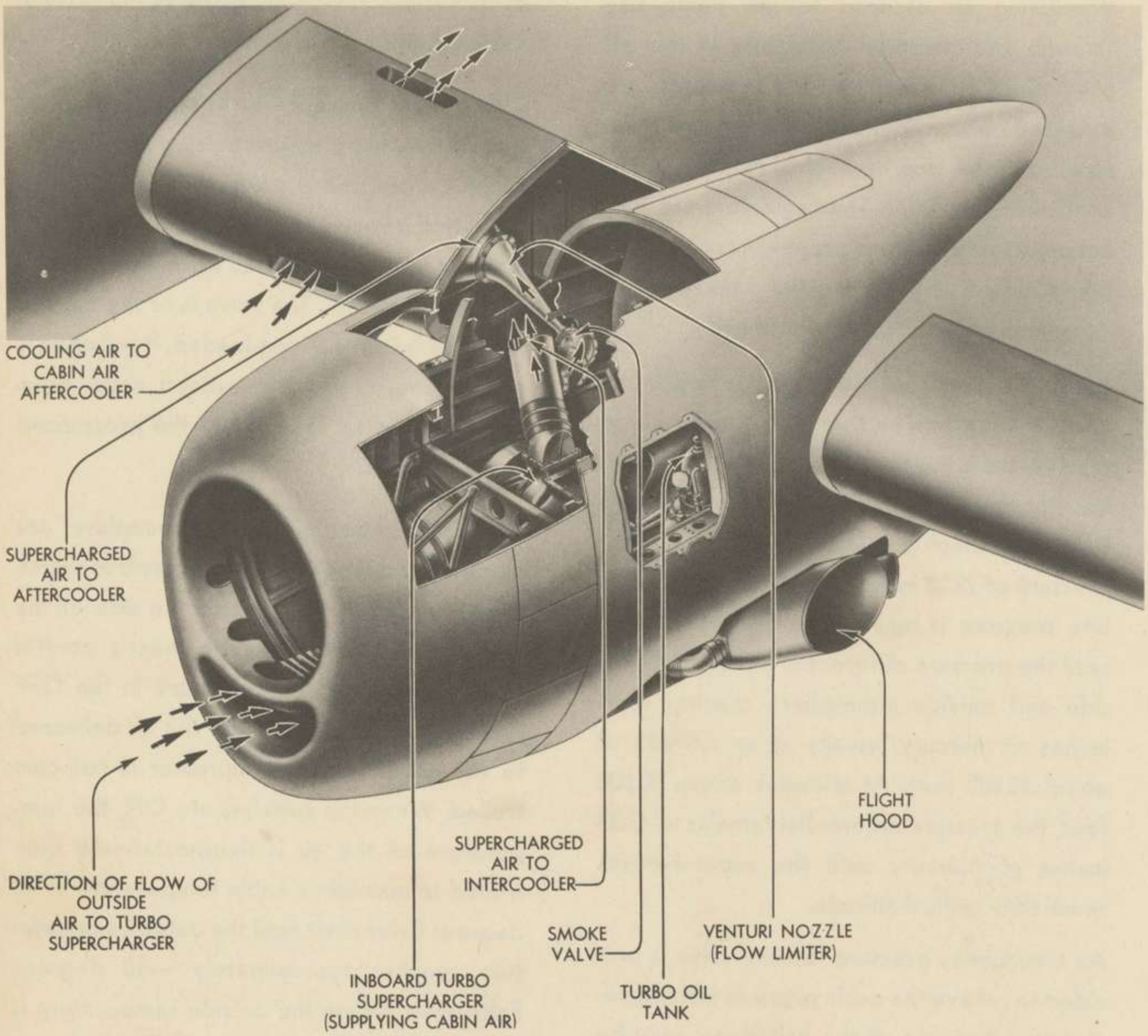

TURBO CABIN SUPERCHARGING

GENERAL DESCRIPTION: In airplanes in which turbosuperchargers are used to pressurize the cabin, the engine-driven supercharger is not installed.

Air for pressurizing the compartments is taken from the outlet or pressure duct leading from the inboard turbosupercharger of each inboard nacelle and led to its respective aftercooler. The air flows through a fire control valve mounted on the nacelle sidewall; and then to the aftercooler through a flow-limiting nozzle. The fire control valve, utilizing a fusible alloy, is designed to close if fire occurs either in the nacelle or inside the ducting system.

The nozzles are similar to a venturi and limit the flow from the turbos in each inboard nacelle to 20 pounds per minute, limiting the total air flow to the cabin to 40 pounds per minute. The nozzle, by limiting the air flow at high engine-power settings, protects the engine against serious loss of power if any of the compartments or ducts are punctured by gun fire. This method of regulating or limiting the air flow to the cabin requires no mechanism and, therefore, is inherently trouble-free.

The amount of ventilating air required by the cabins is small compared with the engine air consumption. Since the cabin air outlet ducts are much smaller than the engine air ducts, there is no unbalancing of turbos at high engine powers. However, at low powers, the overall range of the airplane will be decreased unless the power settings on the inboard engines are adjusted to compensate for withdrawing power from the turbos to provide cabin pressure. In general, this necessitates operating the inboard engines at slightly higher powers than the outboard engines to obtain sufficient turbo-discharge air pressure for cabin supercharging.

At high altitude operation, the effect of this system on engine critical altitude is minimized by setting the cabin air shut-off valve in the "reduced flow" position. The actual effect on the inboard engines is a critical altitude reduction of 500 feet for rated power, and 2,000 feet for military power.

By this method of cabin pressurizing, the gasoline-fired heaters are eliminated. Although considerable heat is derived from compression of the turbo air, it is not enough to heat the cabin at low outside air temperatures.

Heating is obtained from the engine exhaust stack by circulating hot air, taken from the exhaust shroud, in the aftercooler around the tubes which supply the cabin air. An automatic valve, controlled by the cabin thermostat, regulates the temperature of the cabin air by permitting either cold air from the leading edge aftercooler intake, or hot air from the exhaust shrouds to enter the aftercooler. Because of the design of the aftercooler the heating or cooling air cannot mix with the cabin pressure air to contaminate it with exhaust gases.

ENGINE-DRIVEN CABIN SUPERCHARGER

PURPOSE: To provide the proper air flow at cabin pressure in the three pressurized compartments.

LOCATION: There are two independent but identical cabin superchargers, one in each inboard nacelle. Each supercharger is bolted at six points on three support brackets riveted to the nacelle. Access to these points is gained through the doors and openings in the sides and bottoms of the nacelles.

OPERATION: The cabin supercharger is an engine-driven, variable-speed, two-stage compressor. Its sections are divided into a two-stage compressor, a variable-speed transmission, a hydraulic brake pump, a supercharger regulator, and a flexible drive shaft.

The supercharger is in operation whenever the airplane engine is running. Power is taken from the left hand auxiliary drive of each inboard engine through the 24-tooth involute spline at the end of the flexible drive shaft.

The flexible drive shaft consists of two universal joints and two splined shafts accommodating axial and radial movement of the engine. It rotates at a speed of 2.8 times the engine rpm.

The rotation is transmitted from the first to the second section of the shaft through a universal joint. In the second section, a spring-loaded spline coupling allows this member to extend and retract while the rotation continues through a second universal joint to the drive gear.

The three sections of the flexible drive shaft housing are joined in such a way that they may follow the action of their respective drive shaft parts. The housing section next to the engine drive spline forms a standard SAE flange for mounting on the engine pad.

The drive gear incorporates a torsion damper of the compression spring type to absorb any shock caused by sudden changes in engine speed.

The drive gear meshes with the ring gear outer teeth. As the ring gear turns, the ring gear inner teeth drive the three planetary gears. The planetary gears travel within the ring gear, and also mesh with the sun gear which transmits power to the impeller drive step-up gears, the larger of which is mounted on the same shaft as the sun gear.

NOTES

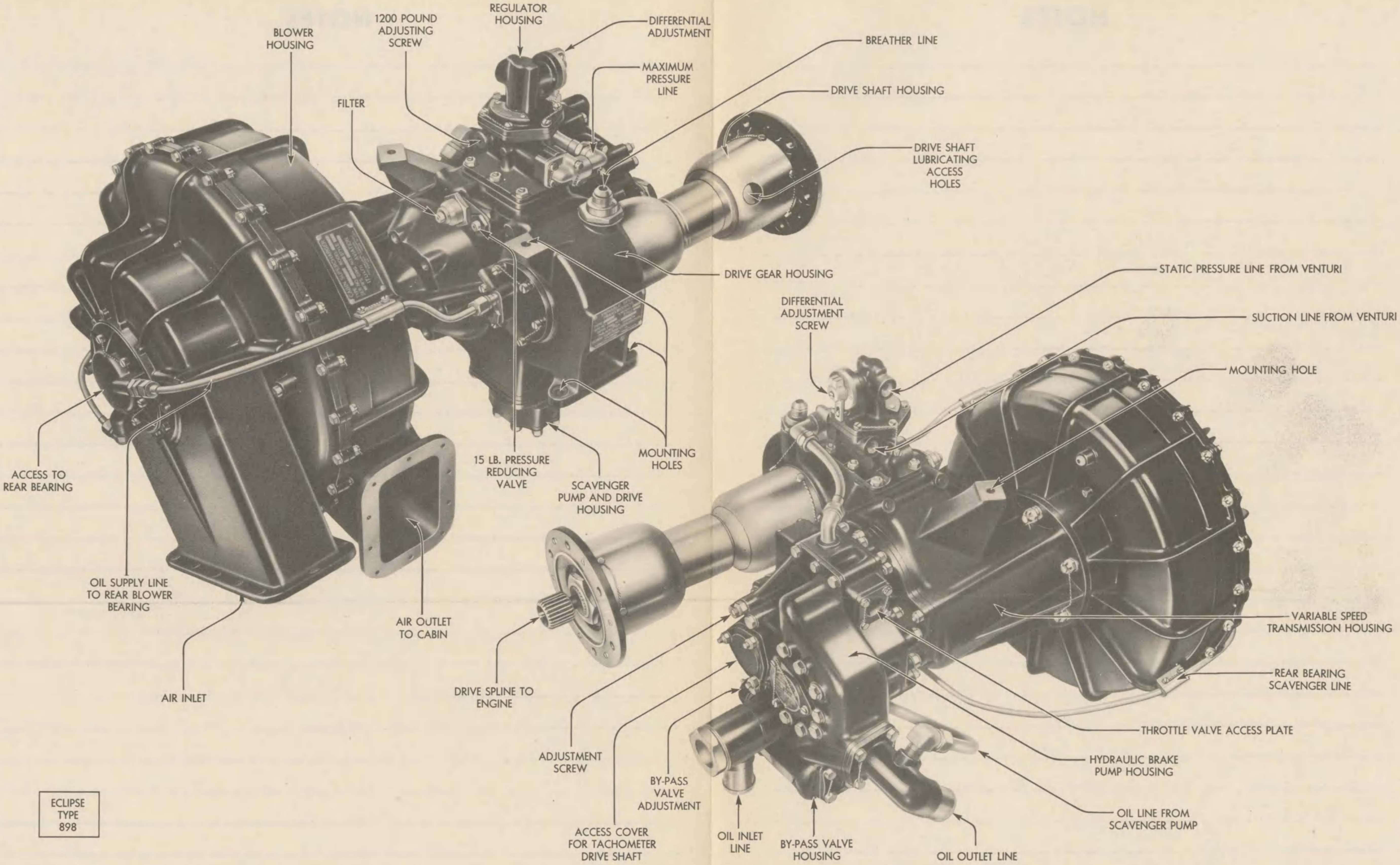

TWO-STAGE CABIN SUPERCHARGER

NOTES

NOTES

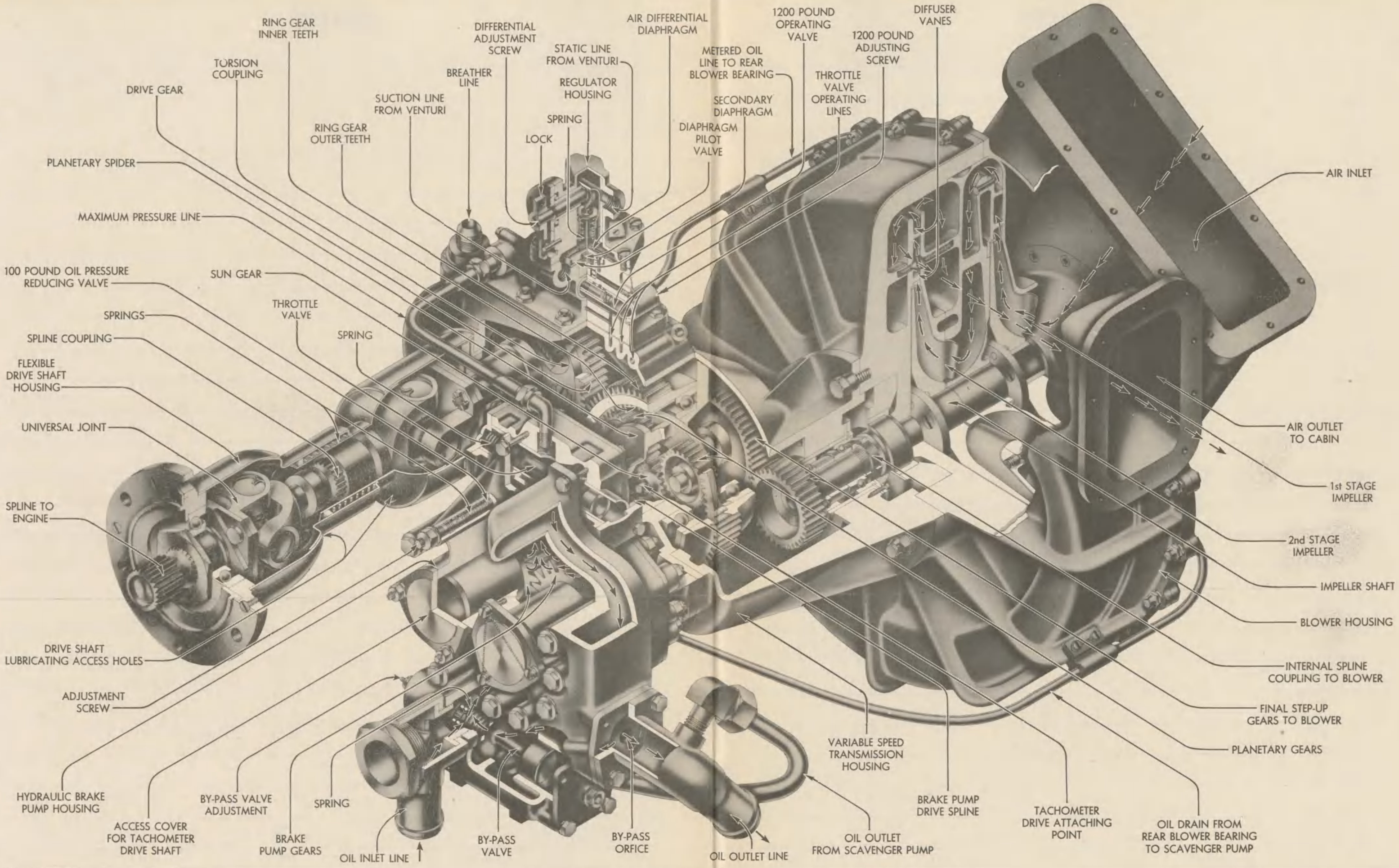

TWO-STAGE CABIN SUPERCHARGER

NOTES

An internal spline coupling connects the smaller step-up gear shaft to the impeller shaft. The first and second stage impellers are attached to this shaft.

Air is drawn through the air inlet in the blower housing by the first-stage impeller which compresses the air, forcing it outward through the diffuser vanes. The air then passes through an annular passage to the second-stage impeller where it is further compressed and forced through diffuser vanes and the air outlet duct to the cabin.

The variable-speed transmission steps up the drive shaft rpm to blower rpm, the degree of step-up being varied by the rpm of the hydraulic brake pump.

The hydraulic brake pump, on the forward side of the compressor, is driven by the transmission through the spider which carries the three planetary gears. The planetary spider shaft is spline-coupled to one of the two brake pump gears.

Oil, supplied from the engine oil system, enters the oil inlet line and flows past the by-pass valve to the brake pump.

The brake pump oil flow makes a complete circuit in which oil, boosted to a high pressure by the pump gears, passes through the throttle valve, and returns through the by-pass valve to the pump gears. The position of the throttle valve determines the pump outlet pressure and consequently, the pump load. If the valve opening is decreased, pressure builds up. This slows the pump, reducing the speed of the planetary spider. This, in turn, increases the speed of the sun gear and the impellers. When the throttle valve opens, the action is reversed, decreasing the speed of the impellers.

However, not all of the oil flows through the circuit described above, as some of it flows through the by-pass orifice. The by-pass valve is spring-loaded to present a differential pressure at the by-pass orifice in the oil outlet between it and the throttle valve, so that a predetermined amount of oil flows through the oil outlet line to the engine oil cooler and tank. The amount of oil passed depends on the size of the by-pass orifice and the setting of the by-pass valve spring.

An inlet passage, teed between the by-pass valve and the oil inlet port, permits the same amount of oil to enter the circuit by pump suction.

The oil is circulated from the engine supply because the power used in driving the brake pump is converted into heat. With the airplane at high altitude and the engine running at maximum rpm, the pump operates at maximum torque and low rpm. The heat so generated is dissipated in the engine oil cooler.

The pressure at the pump outlet is controlled by the throttle valve, which, in turn, is positioned by the supercharger regulator.

Oil to the supercharger regulator, and also to some parts of the variable speed transmission, is supplied by an oil pressure reducing valve. This valve admits oil from the outlet of the hydraulic brake pump at a pressure of from 300 to 1200 pounds per square inch, and reduces it to 100 pounds per square inch. The valve can be adjusted for securing proper regulation.

The purpose of the supercharger regulator is to maintain the air flow constant at any altitude or at any engine speed between cruising and maximum rpm. The regulator is mounted on the top of the compressor.

The pressure differential created by the air flow through the duct venturi acts upon the air differential diaphragm in the regulator. Through the functioning of a secondary diaphragm, together with pilot valves and oil passages, the regulator transmits the effect of the venturi pressure difference into hydraulic pressure which opens and closes the throttle valve.

Excess lubricating oil is pumped to the oil outlet by a scavenger pump bolted to the bottom of the transmission case. The pump drive spur gear meshes with the outer teeth of the ring gear. The pump drive spur gear rotates a helical gear on a horizontal shaft which drives a helical gear on a vertical shaft.

A groove on the end of the vertical shaft engages a tongue on a shaft of the driving gear of the gear-type scavenger pump.

A tachometer drive is provided to measure impeller rpm. Mounted on the hydraulic brake pump, it consists of a right angle drive mechanically connected to the sun gear of the planetary transmission.

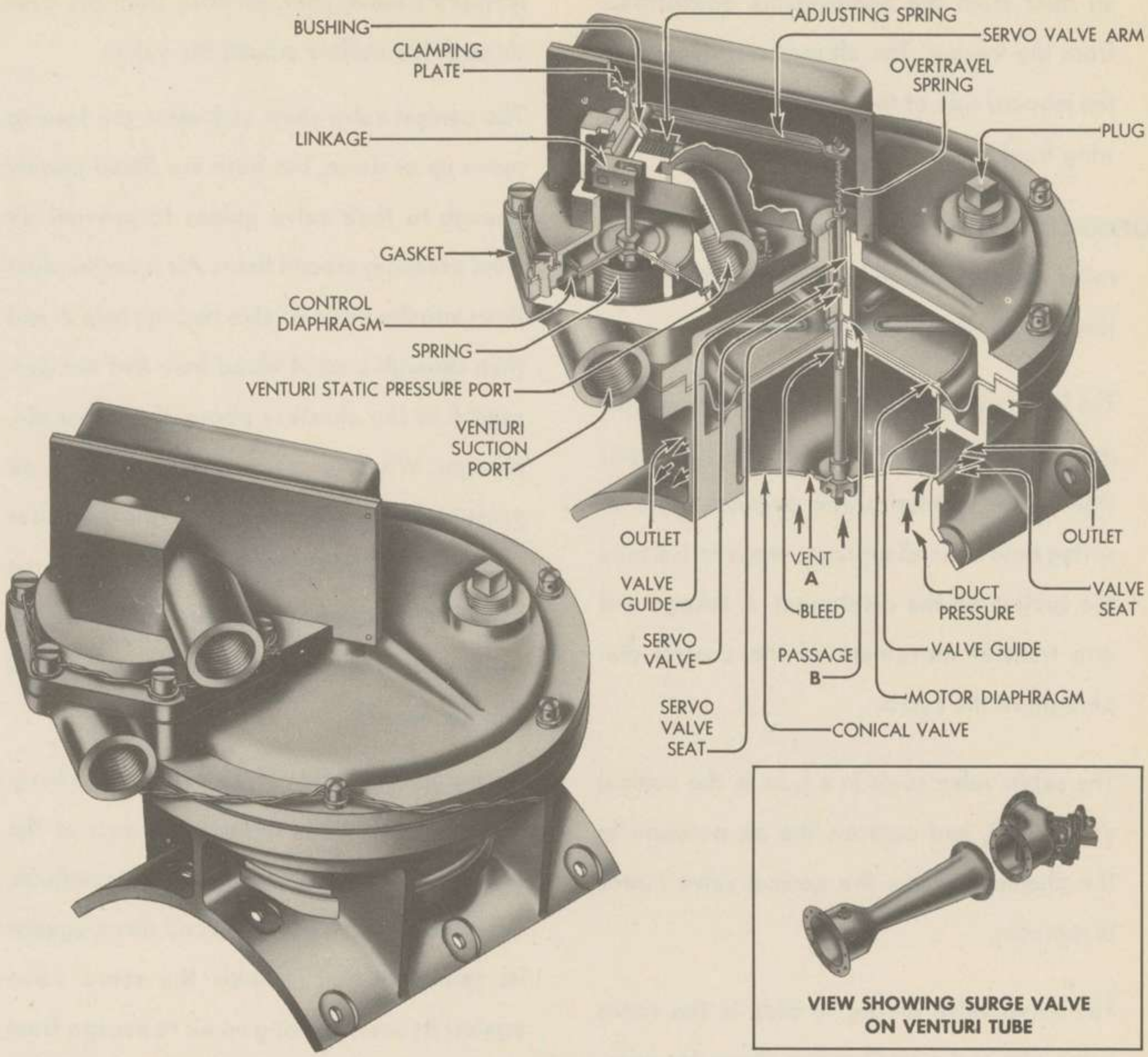

VIEW SHOWING SURGE VALVE ON VENTURI TUBE

SURGE VALVE

PURPOSE: The surge valve prevents surging of the cabin compressor by keeping the airflow above the critical minimum. When the airflow approaches this minimum, the valve opens permitting air to escape from the duct, increasing the flow of air through the supercharger. This action also relieves excessive air pressures which occur when air flow to the cabin is stopped by closing the fire control valve or the cabin air check valve.

LOCATION: A surge valve is located in each inboard nacelle. It is mounted on an elbow in the air duct from the compressors downstream from the venturi. The elbows are located on the inboard side of the nacelle, forward of the wing front spar.

OPERATION: The surge valve consists of a relief valve operated by a control diaphragm through an air-servo mechanism.

The lower side of the control diaphragm is connected to the venturi suction and the upper side to the venturi static pressure port. A spring below the diaphragm tends to balance the suction on the diaphragm. A linkage and arm transfer movement of the control diaphragm to the servo.

The servo valve seats in a hole in the conical valve shaft, and controls the air pressure in the chamber above the conical valve motor diaphragm.

The servo valve is free to slide in the servo valve arm and a small spring allows for overtravel of the valve arm. A spiral torsion spring attached to the shaft connecting the servo valve arm and the linkage from the control diaphragm provides a fine adjustment of the spring load on the control diaphragm.

The valve assembly is bolted to the air duct leading from the cabin compressor, exposing the lower side of the conical valve to duct pressure at all times. When the conical valve is raised from its seat, air flows from the duct through the outlets around the valve.

The conical valve shaft and valve are free to move up or down, but both are fitted closely enough to their valve guides to prevent air from escaping around them. Air from the duct flows into the conical valve through hole A and then through a small bleed hole and out passage B to the chamber above the motor diaphragm. When the servo valve is seated, air pressure cannot escape from the chamber above the diaphragm, but when the servo valve is not seated, air can flow up around the servo valve and out the top of the valve shaft into the nacelle.

For normal operation of the cabin supercharging system, air flows through the duct at the rate of 28 pounds per minute. In this condition, the control diaphragm is forced down against its spring so that it holds the servo valve against its seat, allowing no air to escape from above the motor diaphragm. Duct pressure is transmitted through the small holes to the top of the motor diaphragm. Since the area exposed to duct pressure on the top of the diaphragm is greater than the area of the conical valve, the excess pressure on the diaphragm holds the valve against its seat, so that no air can escape from the duct.

When the output of the cabin superchargers becomes too low, because of high altitudes or low engine speed, the decreased air flow through the venturi (located in the air duct between the supercharger and the surge valve) causes a decrease in the differential between the venturi suction and static pressures. The decrease in the differential allows the spring to push the diaphragm up, unseating the servo valve. This allows air to flow from the chamber above the motor diaphragm.

Since the bleed hole by which duct pressure is transmitted to the top side of the motor diaphragm is small, air flows past the pilot valve faster than it flows through the bleed hole. This decreases the air pressure above the motor diaphragm to a point somewhere between duct pressure and nacelle air pressure. When this pressure drops far enough below duct pressure, the conical valve is forced open and allows air to escape from the duct, thus increasing the air flow from the superchargers to prevent surging.

There are several conditions under which surging may occur, and the minimum air flow necessary to prevent surging varies considerably with these conditions. Under some conditions, therefore, the surge valve may not prevent surging. If a surge should develop, the sudden high duct pressure is transmitted immediately to the conical valve. Because of the small bleed hole, however, it is not transmitted as rapidly to the upper side of the diaphragm. This allows the valve to open momentarily and relieve the surge pressure. In this case, the differential static pressure through the venturi does not fall low enough to cause the control diaphragm to raise the pilot valve. Since the air cannot escape from the chamber above the diaphragm, it slows down and cushions the action of the relief valve, slowly relieving the pressure and tending to damp out and decrease the frequency of the pressure pulsations. This tends to restore the system to stable operation.

When the fire control valve or the cabin air check valve is closed, the duct air pressure immediately rises. If there is a sudden pressure surge such as is caused by the sudden closing of the fire control valve, the surge control valve relieves the pressure in the same manner as in the case of surges from the supercharger. Since the closing of either the fire control valve or the check valve stops all air flow to the airplane cabin, air flow through the venturi also drops quickly. This decreases the pressure differential on the control diaphragm and allows the servo valve to rise. This also causes the conical valve to relieve. The surge control valve then adjusts itself to a balanced condition with the valve partially open, allowing enough air flow to prevent the supercharger from surging.

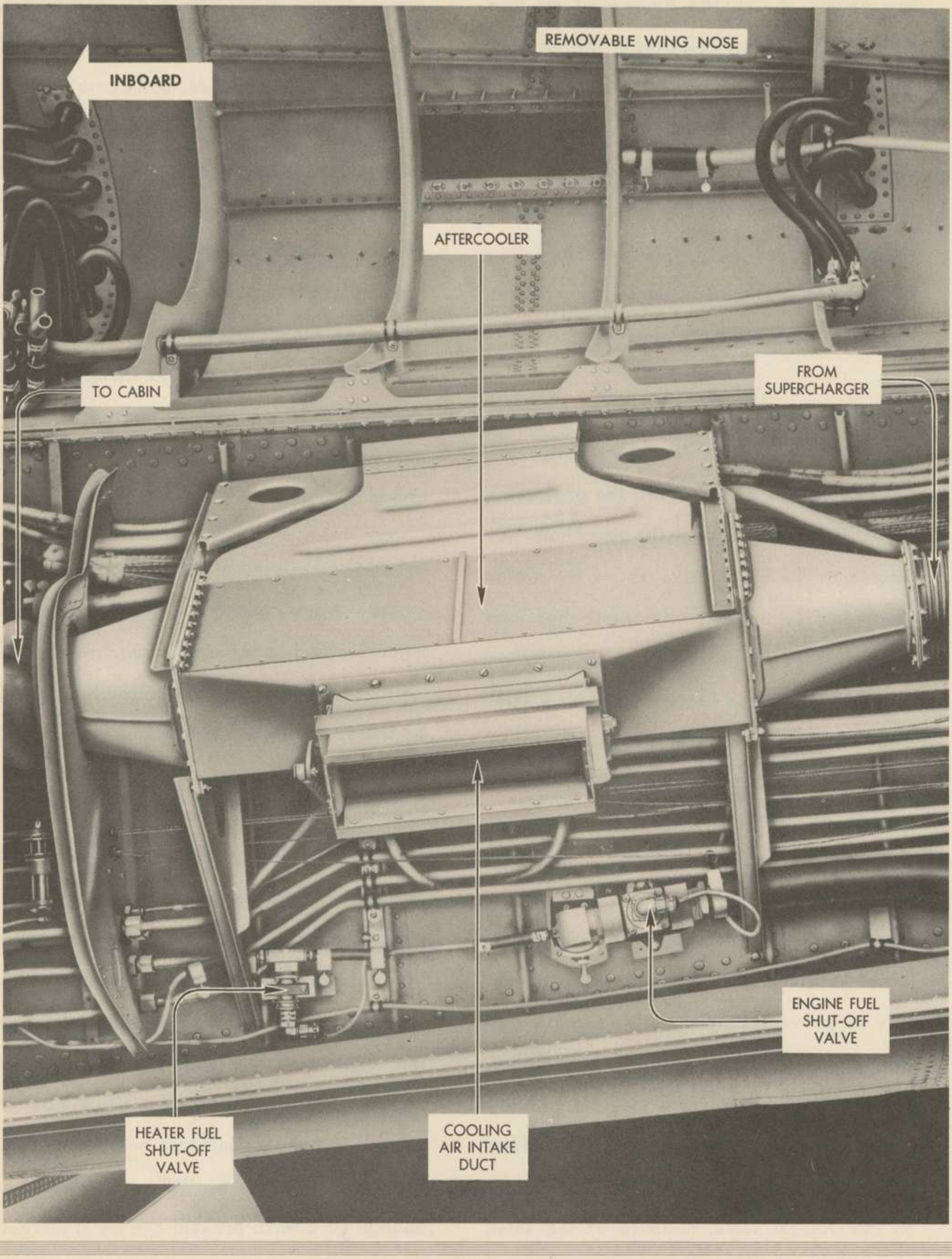

AFTERCOOLER

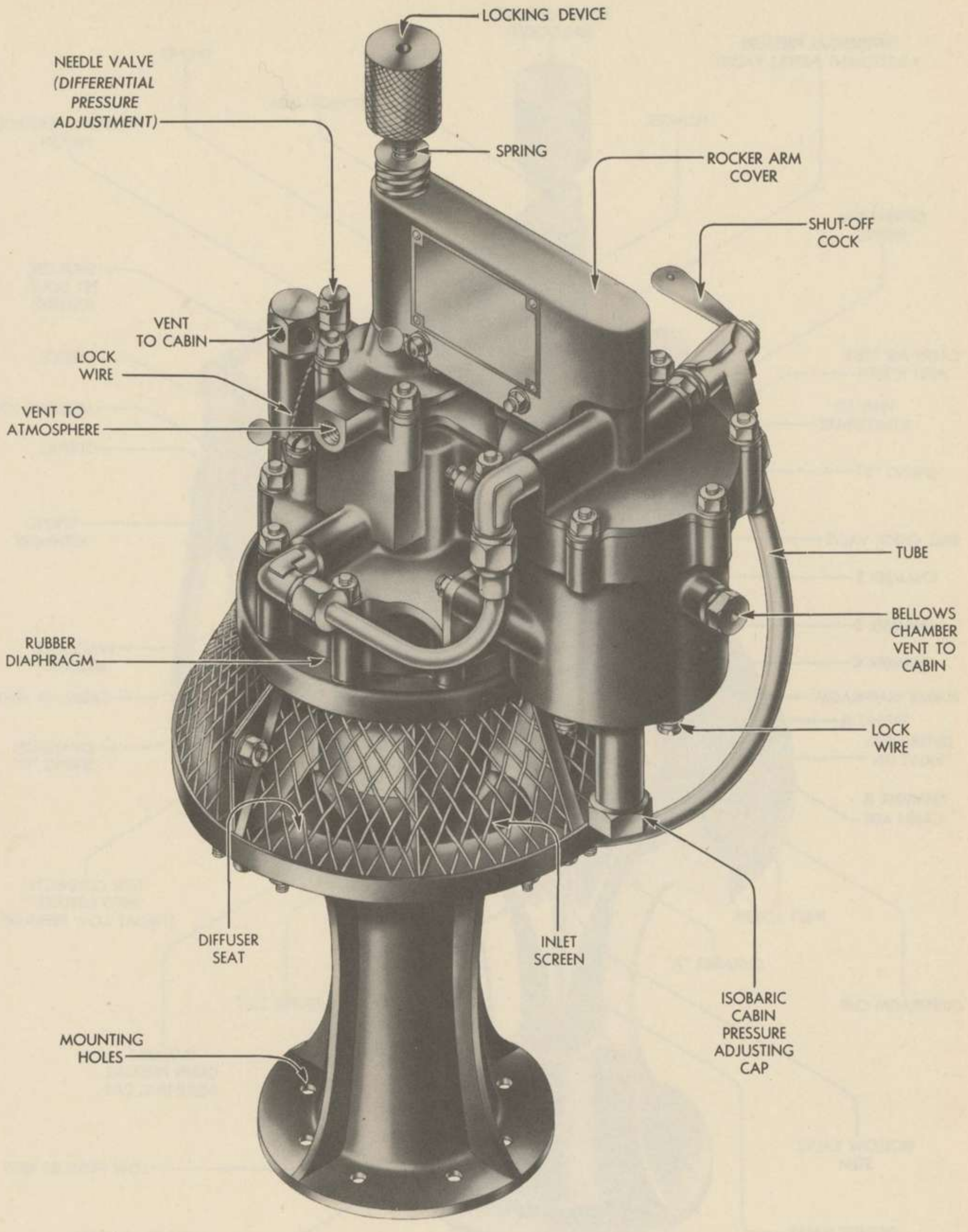

CABIN PRESSURE REGULATOR

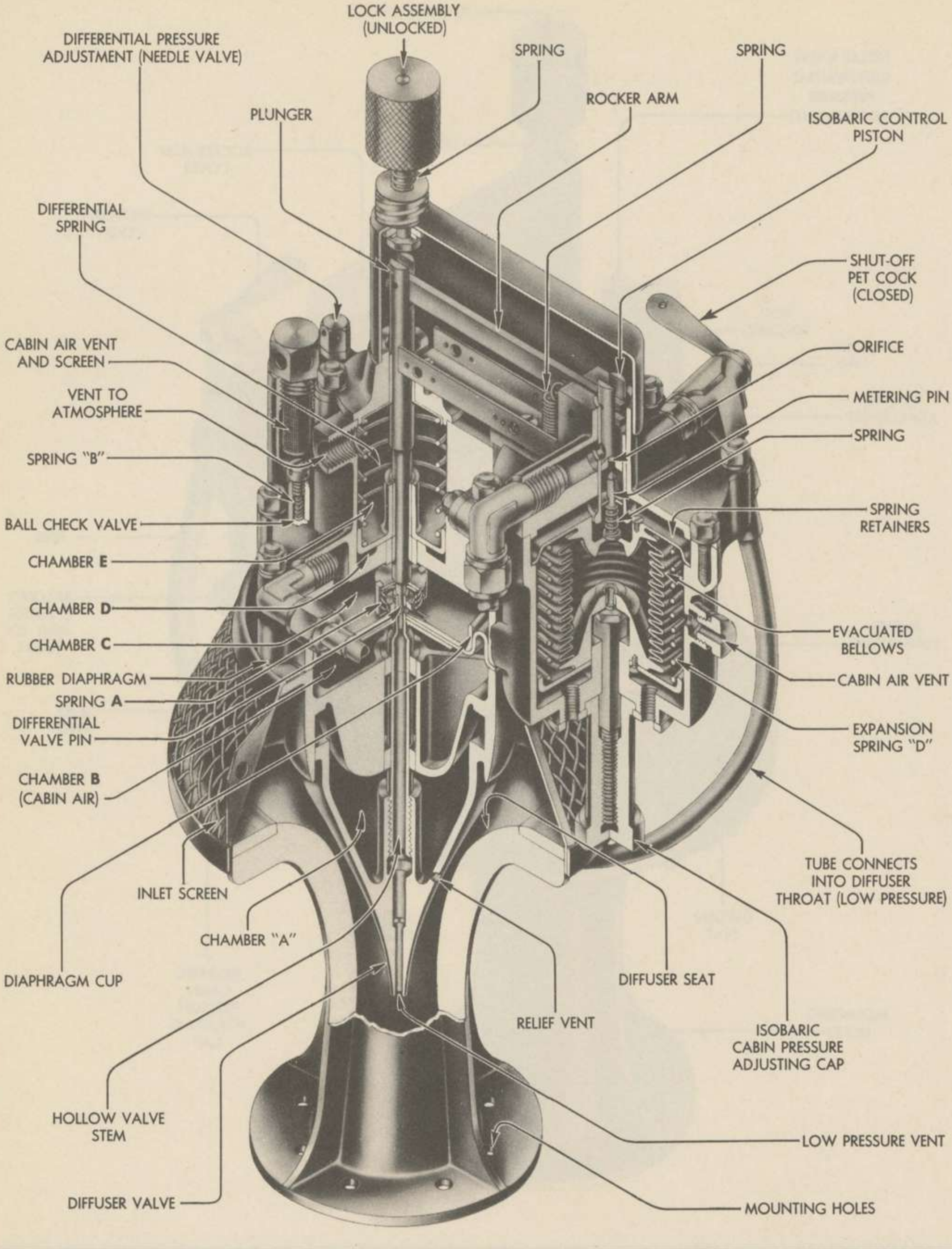

CABIN PRESSURE REGULATOR

CABIN PRESSURE REGULATOR

PURPOSE: To regulate automatically cabin pressure to predetermined pressures, depending on the airplane altitude.

LOCATION: Two pressure regulators are mounted on the floor of the aft pressurized compartment, aft of pressure bulkhead number 646.

OPERATION: There are three cabin pressure regulator conditions. Condition A exists at altitudes up to approximately 8,000 feet. Below this limit cabin supercharging is not necessary and the cabin pressure regulator valves maintain cabin pressure equal to atmospheric pressure.

Condition B or isobaric regulation exists between altitudes of approximately 8,000 feet and 30,000 feet. Within this altitude range, the regulators maintain cabin pressure equal to that at 8,000 feet altitude (22.22 inches of mercury). Condition C or differential pressure regulation occurs above altitudes of 30,000 feet where the cabin pressure regulators maintain a pressure differential of 13.34 inches of mercury between the cabin and atmosphere.

Supercharged air from the cabin enters a screened valve mechanism inlet. The action of differential air pressures on the valve mechanisms determines the opening between the diffuser valve and the diffuser valve seat. Cabin air flows through a screened inlet around the diffuser valve and enters the aft bomb bay through ducts leading from the bottom of the regulators through pressure bulkhead number 646.

Each of the three conditions is explained in detail with accompanying illustrations on the following pages.

MAINTENANCE: No field repairs or adjustments of the cabin pressure regulators is permissible. No lubrication is required.

CONDITION A: This phase of operation occurs at altitudes from sea level to approximately 8,000 feet where cabin supercharging is not required. The diffuser valve, mounted on a common stem with the rubber diaphragm, tends to rest on the diffuser seat because of gravity. Cabin pressure is freely transmitted to chamber B below the diaphragm through the cabin air vent and vent hole number 1. Cabin air is also bled into chamber C above the diaphraam through needle valve X. This needle valve determines the operational sensitivity of the rubber diaphragm, for the greater the opening of the needle valve, the less the venturi suction can effect the lifting of the diaphragm. The cabin pressure in chamber B tends to lift the diaphragm.

As the diaphragm rises, the diffuser valve is lifted from its seat and cabin air flows to the atmosphere, relieving cabin pressure. The venturi action of escaping cabin air maintains a suction above the diaphragm, tending to hold the diffuser valve open.

Cabin air enters chamber A through needle valve Y, and escapes through the relief vents in the diffuser valve. This exerts a small closing force on the diffuser valve. Thus, regulation occurs on the basis of the differential pressure acting on the diaphragm to overcome the weight of the diffuser valve, and the slight downward force exerted on the diffuser valve by the pressure in chamber A.

Actually, a slight differential pressure between the cabin and atmosphere is necessary for regulator operation. The differential pressure is low because of the venturi effect of the regulator outlet which creates a pressure lower than atmospheric pressure around the diffuser valve. This venturi action sucks air from above the rubber diaphragm, tending to open the diffuser valve, lowering cabin pressure.

In condition A, the evacuated bellows is compressed and the isobaric control piston metering pin does not restrict the flow of air through the line to the diffuser throat. Also, the plunger is at all times in contact with the differential valve pin depressing its spring and keeping the pin against its seat. The operation of these units, therefore, need not be considered.

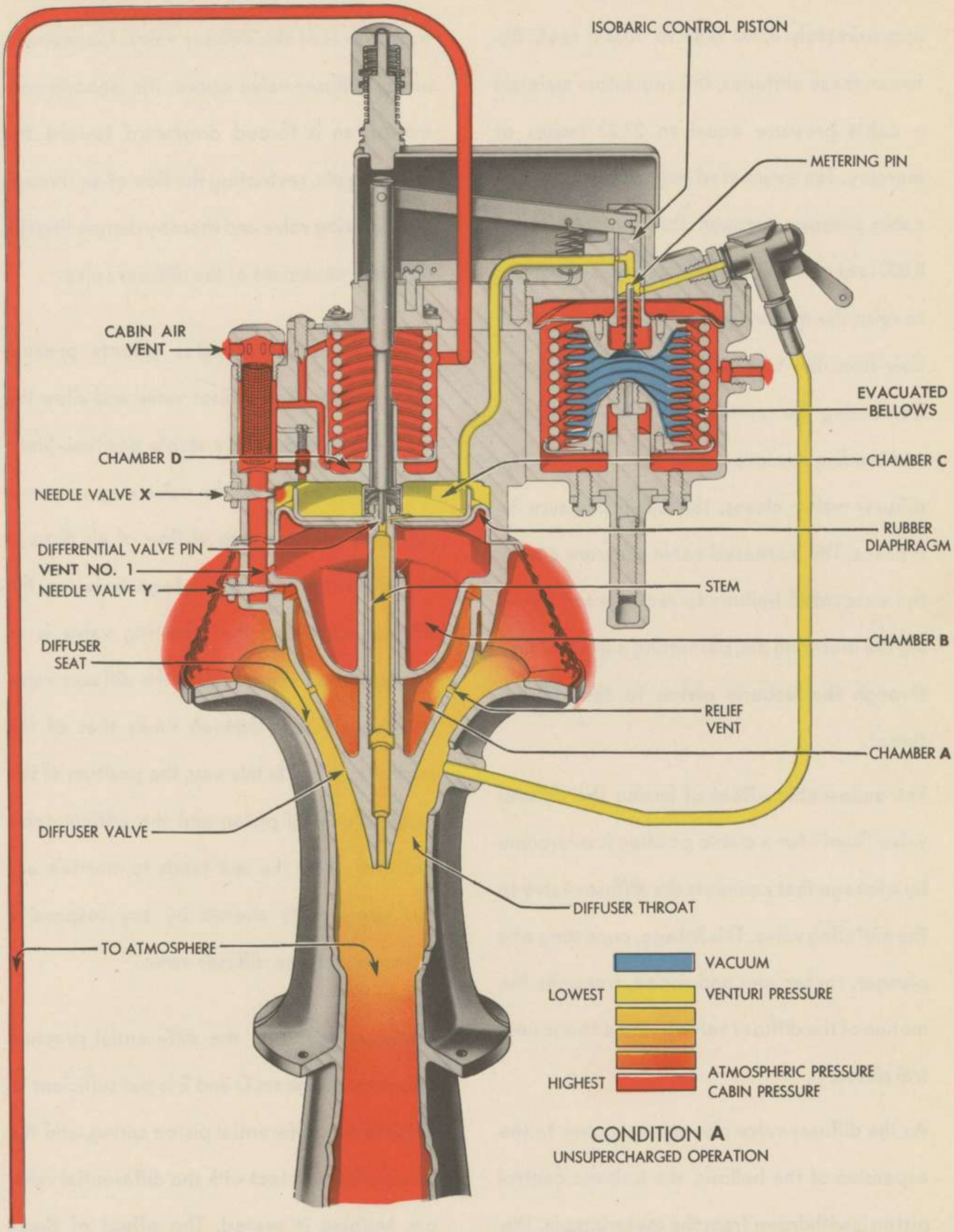

CONDITION **A**
UNSUPERCHARGED OPERATION

CABIN PRESSURE REGULATOR

CONDITION B: This condition occurs from approximately 8,000 feet to 30,000 feet. Between these altitudes, the regulators maintain a cabin pressure equal to 22.22 inches of mercury. The evacuated bellows is exposed to cabin pressure through the vent. At about 8,000 feet altitude, the bellows expands enough to raise the metering pin. This restricts the air flow from the top to the rubber diaphragm, decreasing the suction above the diaphragm and tending to close the diffuser valve. As the diffuser valve closes, the cabin pressure increases. The increased cabin pressure causes the evacuated bellows to recompress, lowering the metering pin, permitting a greater flow through the isobaric piston to the diffuser throat.

The undesirable effect of having the diffuser valve "hunt" for a stable position is overcome by a linkage that connects the diffuser valve to the metering valve. This linkage, consisting of a plunger, rocker arm and spring, transmits the motion of the diffuser valve to the isobaric control piston.

As the diffuser valve closes in response to the expansion of the bellows, the isobaric control piston is withdrawn from the metering pin. This action tends to open the passage of the isobaric control piston, dampening the downward travel of the diffuser valve. Conversely, as the diffuser valve opens, the isobaric control piston is forced downward toward the metering pin, restricting the flow of air through the metering valve and thereby dampening the opening movement of the diffuser valve.

These immediate counter effects prevent over-travel of the diffuser valve and allow the diffuser valve to seek a stable position. Since the stable position of the valve may vary considerably with the rate of flow of air through the diffuser throat, the linkage between the diffuser valve and the metering valve is so arranged that the travel of the diffuser valve is approximately thirteen times that of the metering valve. In this way, the position of the isobaric control piston and the critical cabin pressure which the unit tends to maintain are not appreciably altered by any responsive movement ot the diffuser valve.

During condition B, the differential pressure between chambers D and E is not sufficient to actuate the differential piston spring, and the plunger is in contact with the differential valve pin, keeping it seated. The effect of these units, therefore, need not be considered.

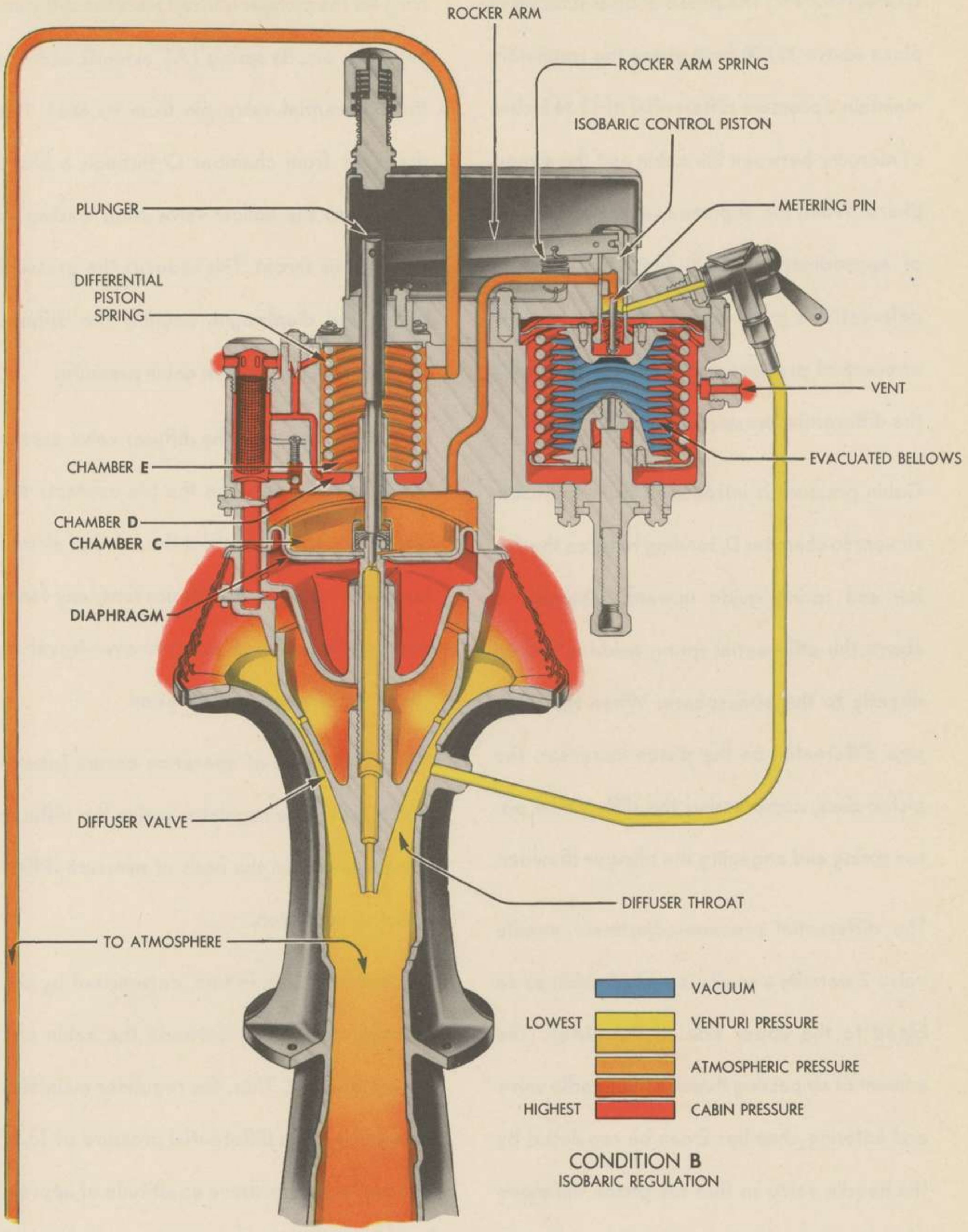

CABIN PRESSURE REGULATOR

CONDITION C: This phase of operation takes place above 30,000 feet where the regulators maintain a pressure differential of 13.34 inches of mercury between the cabin and the atmosphere. When the airplane reaches an altitude of approximately 30,000 feet, the pressure differential is great enough that the isobaric or constant pressure control is overridden by the differential pressure control.

Cabin pressure is introduced from the cabin air vent to chamber D, tending to force the piston and spring guide upward. Chamber E above the differential spring guide is vented directly to the atmosphere. When the pressure differential on the piston increases, the piston rises, compressing the differential piston spring and engaging the plunger shoulder.

The differential pressure-adjustment needle valve Z permits a small amount of cabin air to bleed to the upper side of the piston. The amount of air passing through this needle valve and entering chamber E can be regulated by the needle valve so that the piston will move when the differential pressure between cabin and atmosphere reaches 13.34 inches of mercury. As the plunger is lifted from the differential valve pin, its spring (A) extends and lifts the differential valve pin from its seat. This draws air from chamber C through a bleed passage to the hollow valve stem leading to the diffuser throat. This reduces the pressure above the diaphragm, causing the diffuser valve to rise, and relieve cabin pressure.

As the plunger rises, the diffuser valve assembly follows it and when the pin contacts the plunger, it tends to restrict the entry of air into the hollow valve stem. This prevents any tendency of the diffuser valve to over-travel or "hunt" in this phase of operation.

When this phase of operation occurs (above 30,000 feet), the regulator varies the diffuser valve opening on the basis of pressure differential on the piston.

This differential is, in turn, determined by the pressure differential between the cabin and the atmosphere. Thus, the regulator maintains a constant cabin differential pressure of 13.34 inches of mercury above an altitude of approximately 30,000 feet, until the supercharger reaches its maximum operating capacity.

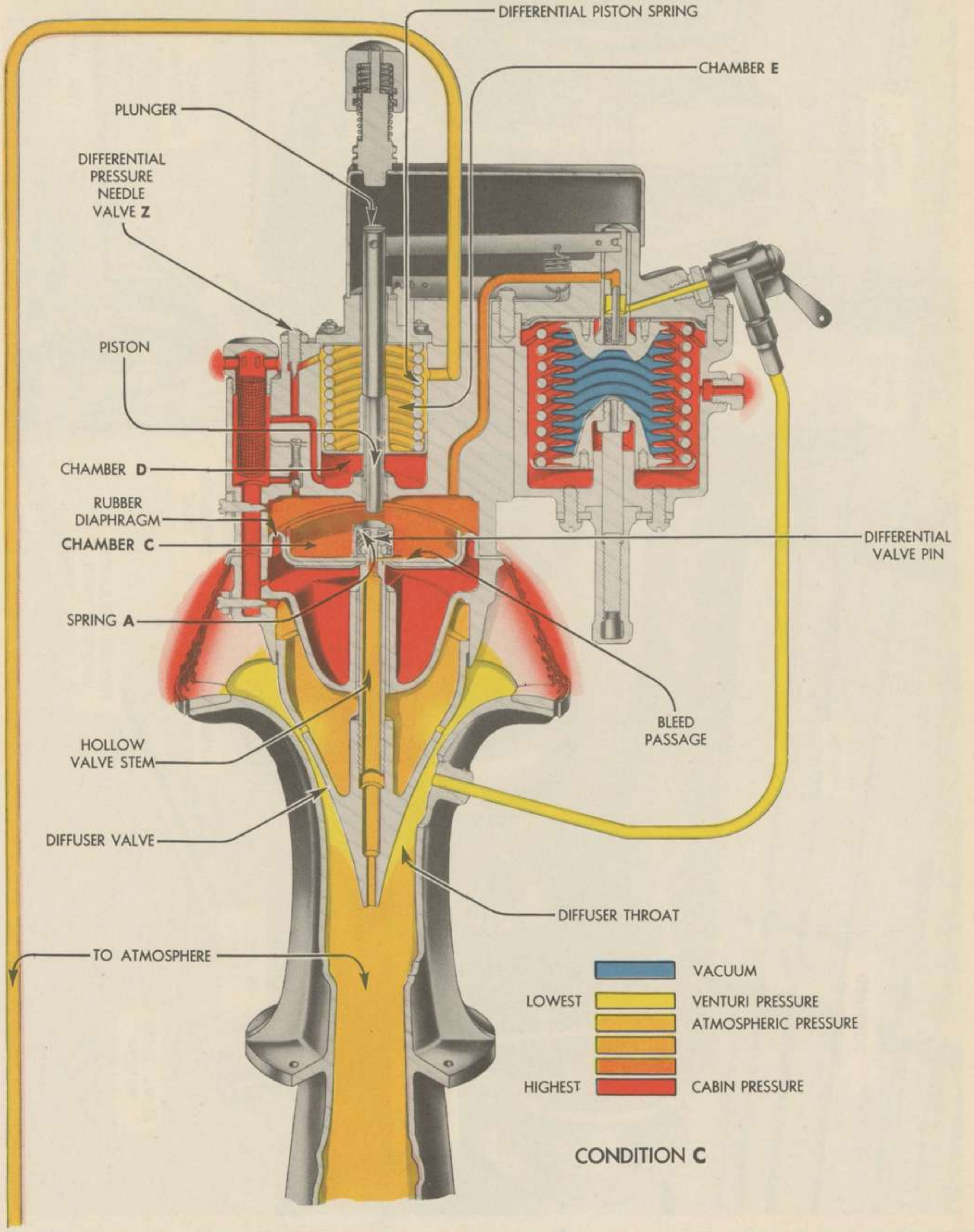

CABIN PRESSURE REGULATOR

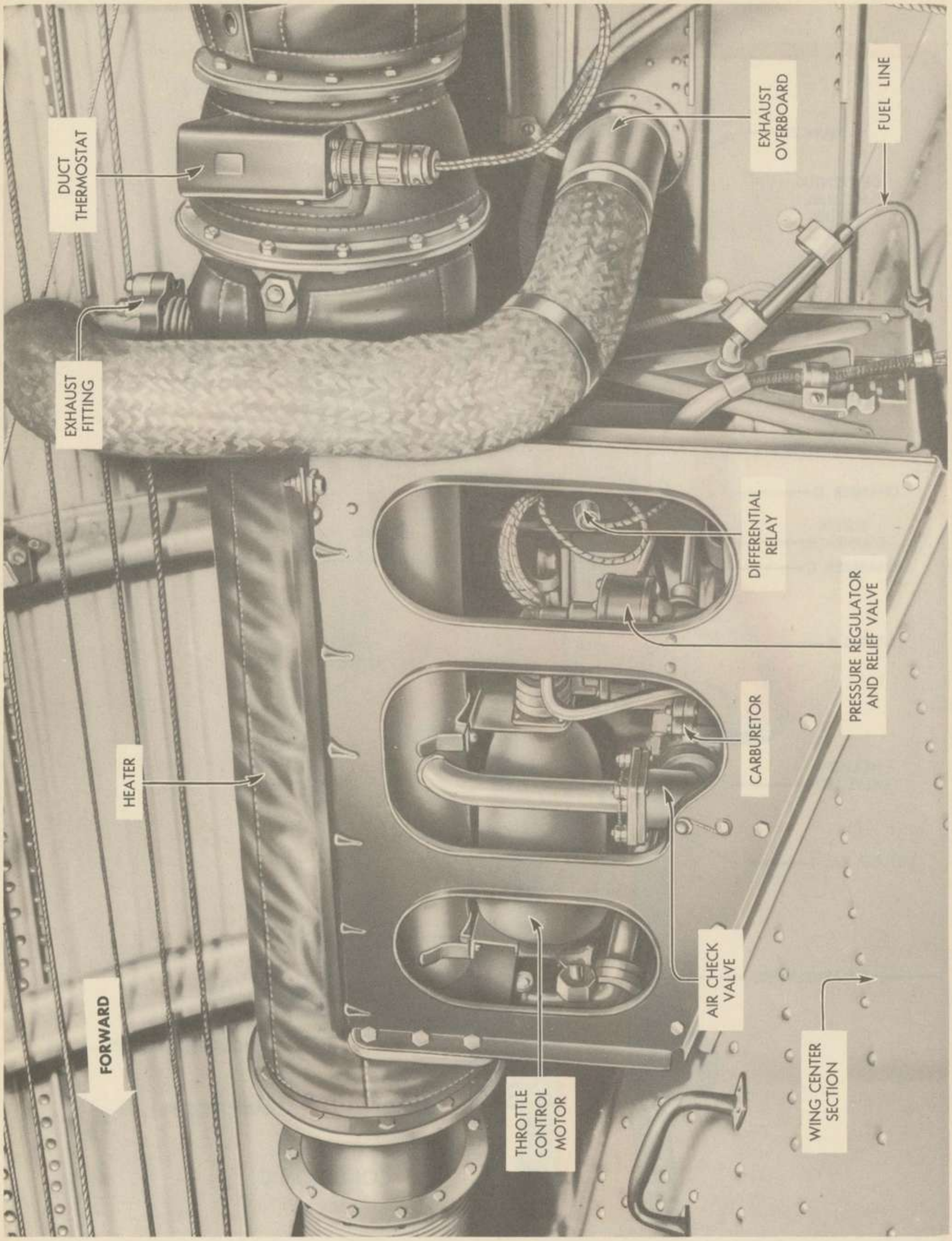

CABIN HEATER

CABIN HEATER

PURPOSE: To provide heat for the airplane's pressurized compartments.

LOCATION: Two cabin heaters are mounted on the upper surface of the wing center section inside the fuselage.

OPERATION: The cabin heaters are of the gasoline-burning type using engine fuel. A mixture of gasoline and air is burned in an enclosed combustion chamber. The hot gases which result pass through a heat exchanger and out of the heater through a stainless steel exhaust tube. Cabin air is heated in passing over the exchanger. Fins on the exchanger help to transfer the heat. The combustion air is supplied from the cabin air through a check valve in the heater.

Fuel for each heater is taken from the inboard engine fuel supply lines between the fuel tank fitting and the engine main fuel shut-off valve, so that the heaters can operate when the fuel to the inboard engines is shut off. The gasoline is conveyed by a $1/4$-inch aluminum alloy tube which runs along the forward side of the wing front spar to the wing root and then over the wing center section to the heater. A heater fuel shut-off valve is located in the fuel line between the inboard nacelle and the wing root. It shuts off fuel when the heater is not in operation.

After reaching the heater assembly, fuel passes through a filter, a fuel pump, a pressure regulator, and a carburetor before reaching the combustion chamber.

The filter is a combination settling-bowl and screen which removes foreign material from the fuel. Fuel pressure necessary for operating the heater is supplied by a constant-speed electric motor driving a vane-type pump. The pressure regulator contains a diaphragm exposed on one side to carburetor air pressure and on the other side to the fuel pressure in the carburetor line. This diaphragm operates a relief valve which controls the pressure of fuel entering the carburetor by returning excess fuel to the intake side of the fuel pump. A spring on the upper side of the diaphragm

CABIN HEATER DIAGRAM

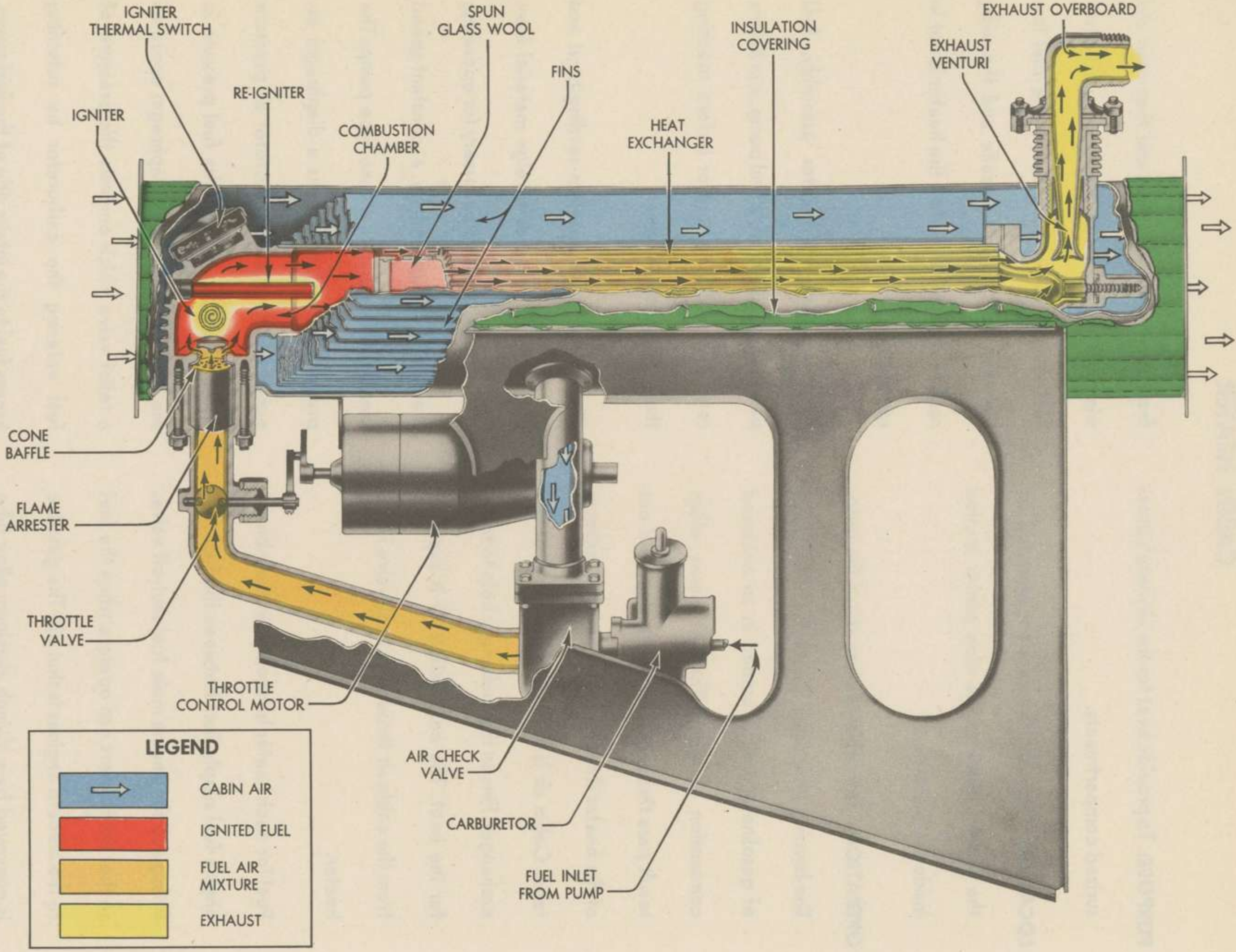

is adjusted so that the pressure regulator always keeps the fuel pressure three pounds per square inch higher than the air pressure.

Fuel passes from the pressure regulator to the carburetor where it is mixed with air. The air is led to the carburetor through a tube from the cabin air passage of the heater. A check valve in the tube prevents any reverse flow. The air line is also connected to the pressure regulator so that the air pressure may be transmitted to the regulator diaphragm. The carburetor contains an altitude compensator to give a reasonably constant fuel-air ratio at all altitudes.

The amount of fuel-air mixture flowing to the heater is regulated by a butterfly throttle valve positioned by the heater control motor which is controlled by the cabin temperature thermostat. Before reaching the combustion chamber, the mixture flows past the throttle and through a flame arrestor. A baffle at the entrance to the combustion chamber distributes the gases uniformly in the chamber where they are ignited by an electric igniter. As soon as the heater temperature rises sufficiently, the electric igniter is shut off by a thermal switch and the mixture is ignited by the re-igniter. This re-igniter, which is made of inconel metal, protrudes into the combustion chamber. As soon as combustion takes place in the chamber, the re-igniter becomes white hot and continues to ignite the gases after the electric igniter is shut off.

Burning gases are directed against a baffle where the flame is extinguished. The exhaust gases then flow over a tube directing them along the exchanger to the heater exhaust. Spun glass wool in the tube acts as a deadening agent for the noise caused by the combustion of the gas.

Overheat switches on the exchanger shut down the heater if the exchanger becomes too hot. A duct thermostat in the cabin air stream near the outlet end of the heater also stops operation of the heater if the temperature of the cabin air leaving the heater exceeds 310 degrees Fahrenheit.

DUCT PRESSURE REGULATOR

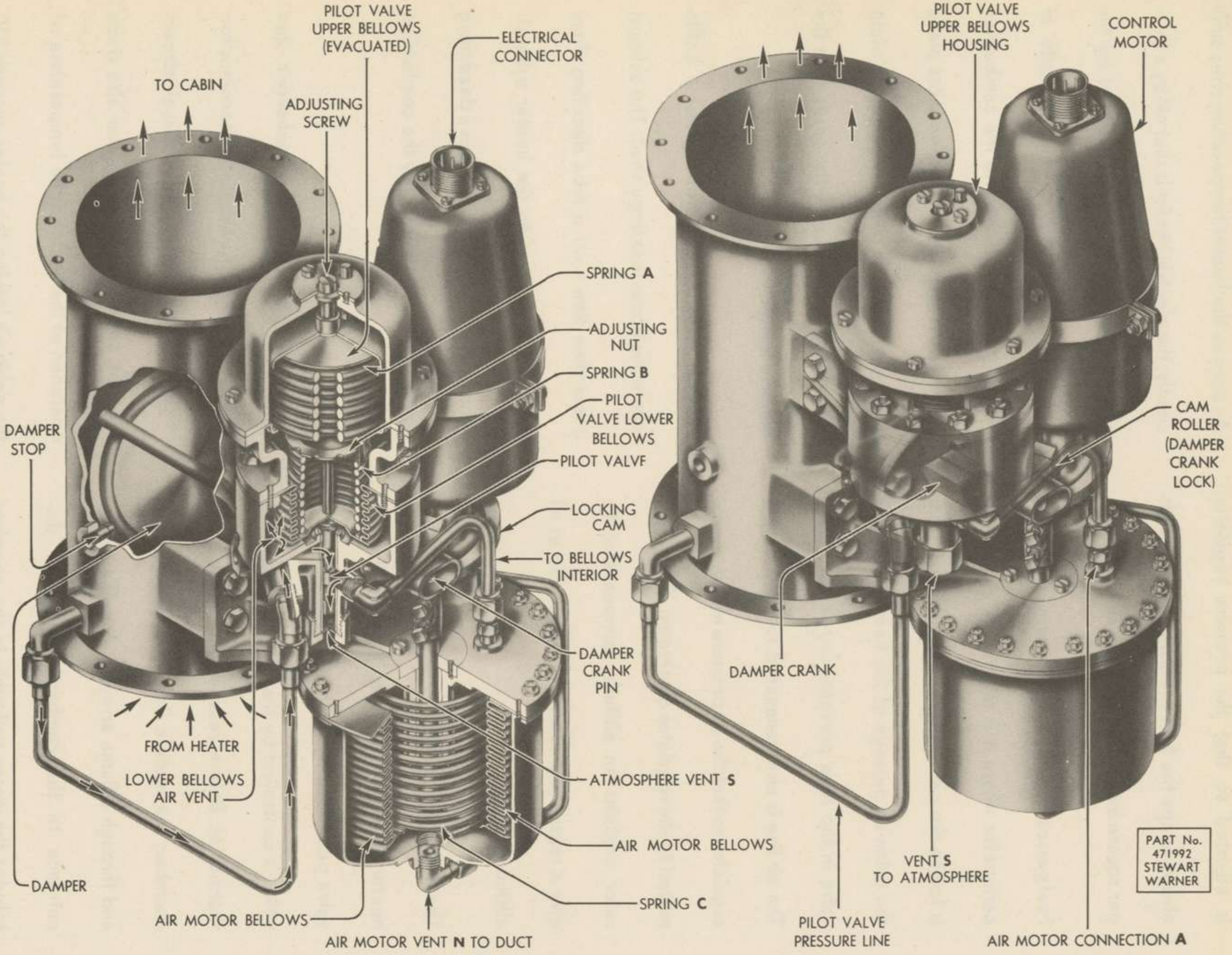

DUCT PRESSURE REGULATOR

PURPOSE: To maintain a minimum air pressure differential of six inches of mercury between the cabin air duct (heater carburetor air) and the atmosphere whenever the heater is in use. This pressure differential is required for proper combustion in the heater.

LOCATION: There are two duct pressure regulators, one in each cabin heating system. They are located above the wing on either side of the communications tunnel and are mounted in the air duct between the heaters and the tunnel.

OPERATION: The duct pressure regulator consists of a damper positioned by an air motor bellows which is controlled by two pilot bellows. A control motor is also included in the assembly. A cam is mounted on the control motor shaft which locks the duct damper in a wide open position when the aftercooler damper is open and the cabin heater is not operating.

The air motor bellows is spring-loaded and encased in a chamber vented to the cabin air through the air motor vent (vent N) tube. The inside of the bellows connects to the pilot valve. The flow of air to or from the bellows is controlled by the action of the pilot valve which is positioned by the pilot valve upper and lower bellows.

The pilot valve upper bellows is evacuated and externally spring-loaded. It is sensitive to atmospheric (heater exhaust) pressure changes.

The pilot valve lower bellows is internally spring-loaded and exposed on the inside to atmospheric pressure. The bellows is encased in a chamber connected through an air vent and the pilot valve pressure line to the cabin air pressure.

Both bellows, in tandem through a plunger, operate a piston (pilot) valve regulating the pressure on the inside of the air motor bellows, by controlling the flow of air through the valve housing to the atmosphere.

When the cabin air system is operating, duct pressure is transmitted through the air motor vent line to the outside of the air motor bellows and through the pilot valve pressure line to the outside of the pilot valve lower bellows. At the same time, a small amount of the air from the pilot valve line is metered around the pilot valve past the entrance to the air motor bypass line, and out to the atmosphere. This provides, inside the motor bellows, a pressure ranging between duct pressure and atmospheric pressure.

The duct damper, actuated by the air motor, remains "closed" (15 degrees open position) until a duct pressure of six inches of mercury above atmospheric is reached. Until this pressure is obtained, the pilot valve lower bellows remains extended. The pilot valve is thus kept in such a position that the atmospheric vent port is closed and duct pressure is transmitted to the upper side of the motor bellows. Since the pressures inside and outside the motor bellows are equal, the spring holds the duct damper closed.

When the duct pressure reaches six inches of mercury above atmospheric pressure, the pilot valve lower bellows will have contracted far enough to raise the pilot valve and allow a small amount of air to be bled from the air motor line to the atmosphere, thus lowering the pressure in the motor bellows. The decreased pressure in the motor bellows causes the bellows to compress. This compression gradually opens the damper in the duct until the damper is open enough to accommodate the flow of air from the cabin compressor and still maintain the necessary six inches of mercury pressure in the duct.

When the pressure becomes too high, the pilot valve lower bellows contracts, raising the valve. This cuts off the flow of air from the pilot valve pressure line and allows the pressure in the air motor bellows to be reduced to atmospheric pressure. This causes the bellows to contract, opening the duct damper and removing the restriction to cabin air flow.

When the duct pressure becomes too low, the pilot valve lower bellows lowers the valve. This closes off the atmospheric vent and allows full duct pressure to be transmitted to the inside of the motor bellows. The spring in the motor bellows then acts to close the duct damper and build up duct pressure.

The above action occurs at altitudes below 16,000 feet. Above this altitude, the duct damper is open to its maximum and duct pressure is maintained by the cabin pressure regulators. Cabin pressure is kept at 8,000 feet by the regulators until an actual altitude of approximately 30,000 feet is reached.

When the cabin is not pressurized, the action of the lower bellows continues up to an altitude of 23,000 feet. At this altitude, the upper pilot bellows will have expanded. In conjunction with the lower pilot bellows, the expanded upper pilot bellows maintains, through damper flow

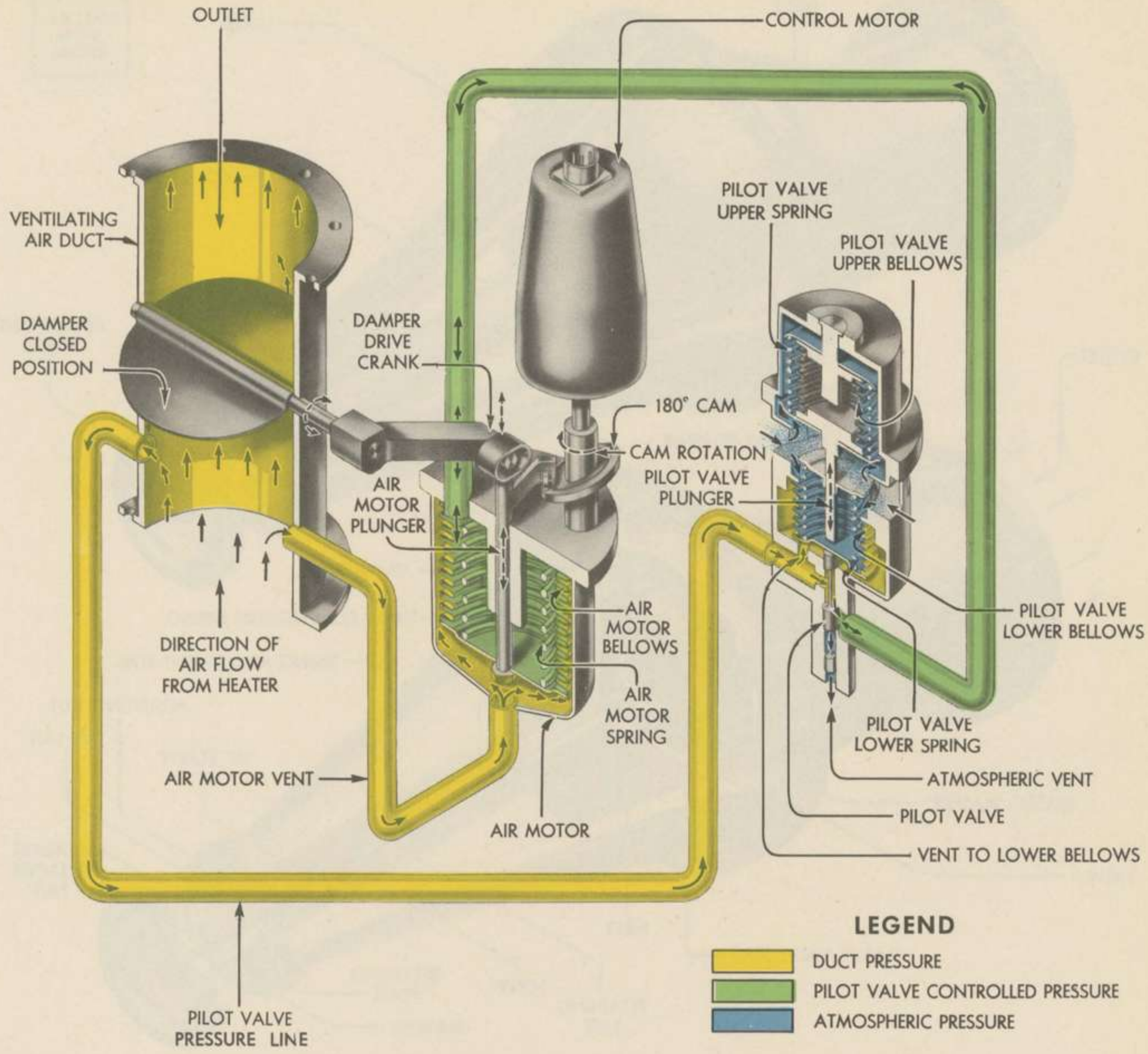

DUCT PRESSURE REGULATOR

restriction, a duct back pressure equal to an altitude of 13,500 feet at altitudes above 23,000 feet. This corresponds to an absolute duct pressure of 18 inches of mercury and insures sufficient air for heater operation at all altitudes above 23.000 feet.

When the heater is not being used, there is no need of duct pressure and the control motor and cam lock the duct damper in the open position.

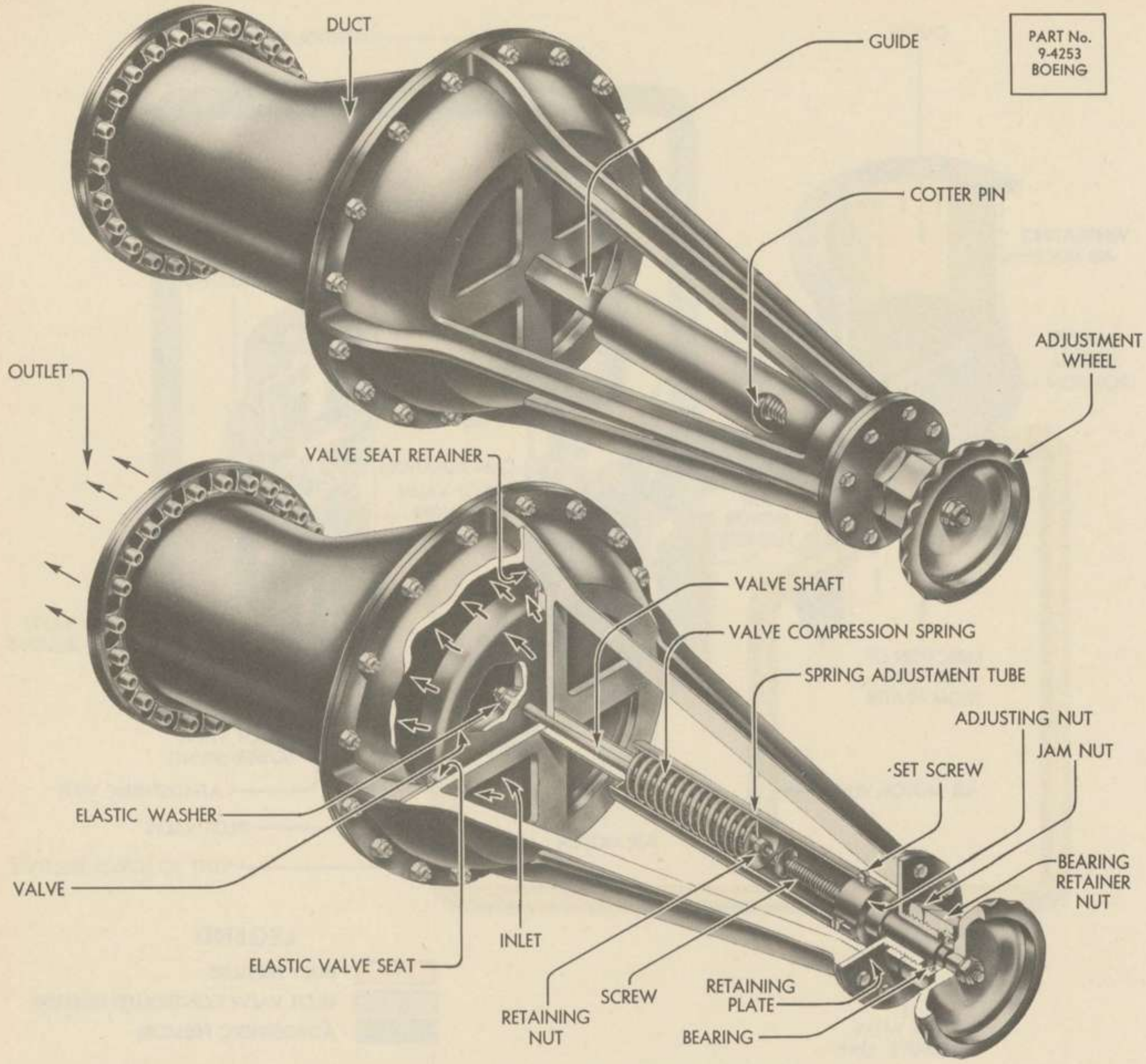

CABIN PRESSURE RELIEF VALVE

PURPOSE: To provide a manual means of regulating cabin air pressure and to provide a relief valve which will automatically relieve excessive cabin pressures if the automatic cabin pressure regulators fail to function properly.

LOCATION: The cabin pressure relief valve is located under the engineer's seat.

OPERATION: The cabin pressure relief valve consists of a valve body and a spring-loaded valve with a means of manually changing the spring tension on the valve. The valve, on the side toward the spring, is open to cabin pressure through the openings in the valve body. The other side of the valve is connected to atmosphere by a duct from the nose wheel well. When the pressure in the cabin exceeds the outside pressure by a sufficient amount, the air pressure on the valve overcomes the spring, and the valve opens, allowing air to escape from the cabin.

The spring is mounted in the adjustment tube, and bears against a plate welded into the end of the tube. This plate contains a square hole which allows the tube to slide on the guide, but prevents its turning. The valve shaft is connected to the spring through a washer bearing against the spring and a retaining nut on the end of the shaft. An adjusting nut is fastened to the other end of the spring adjustment tube by three set screws. A screw turning in the adjusting nut and an adjustment wheel fastened to the screw provide a means of raising or lowering the tube, thereby changing the compression of the valve spring and changing the amount of differential pressure necessary to open the valve.

In this way, cabin pressure may be adjusted to any desired differential pressure. With the spring fully compressed, the valve opens when the cabin pressure exceeds the outside pressure by 7 pounds per square inch. The spring is fully compressed when the adjusting nut is against the shoulder on the screw, as shown in the illustration. The pull exerted on the screw by the spring is taken by the bearing under the adjustment wheel. A washer on the lower end of the screw serves as a stop to prevent turning the screw completely out of the adjusting nut. The screw can be turned far enough to relieve all the spring load on the valve and allow relief of cabin air pressure.

When closed, the valve seats against a synthetic rubber ring on the valve body, making an airtight seal.

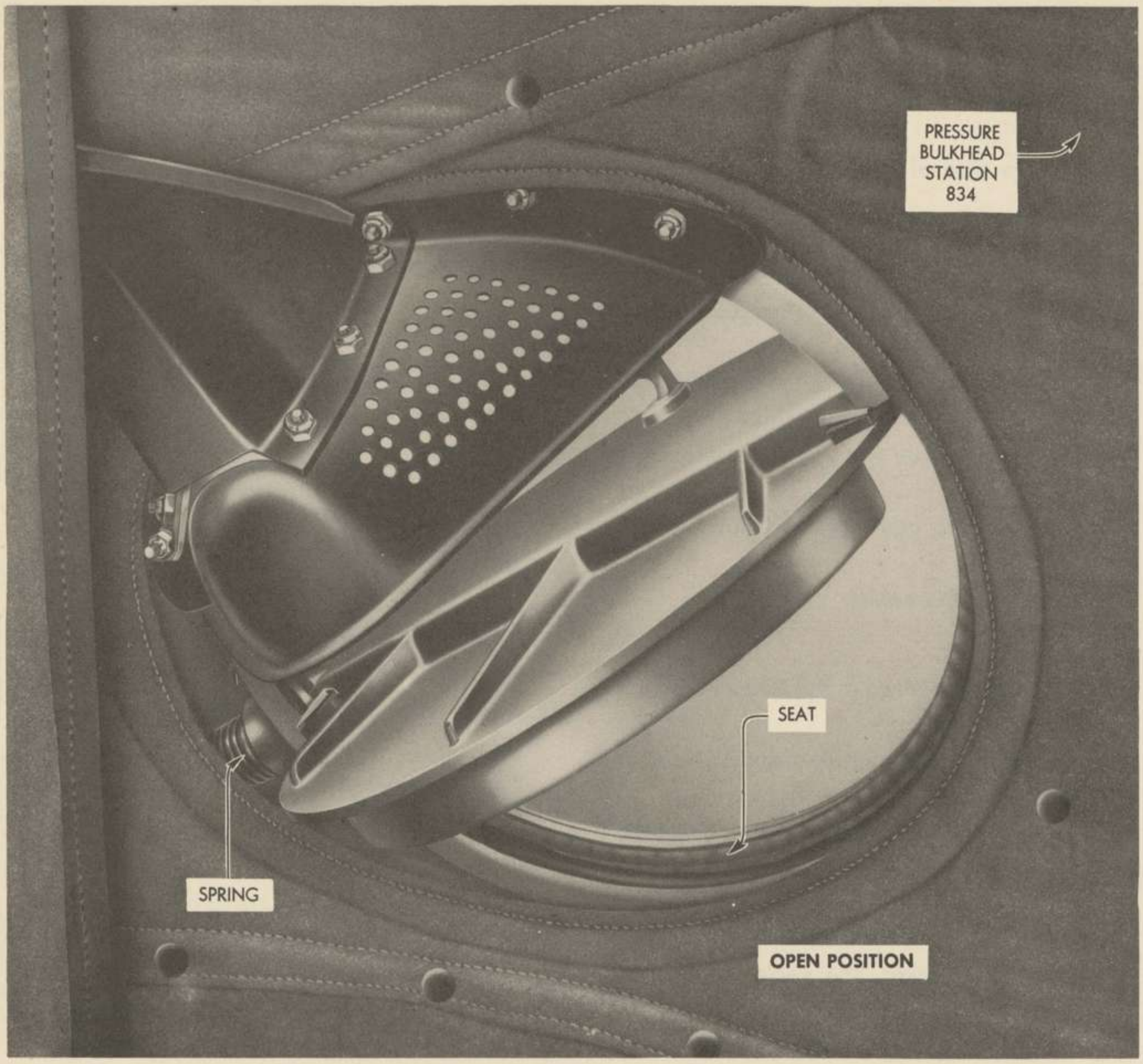

OPEN POSITION

EMERGENCY PRESSURE RELEASE VALVE

PURPOSE: To provide a means of releasing cabin pressure quickly so that exit doors may be opened.

LOCATION: In the rear pressure bulkhead of the rear pressurized compartment on the right side of the bulkhead door.

OPERATION: The emergency release valve is of the butterfly type and is spring-loaded so that it will open when the catch is tripped. The shafts protruding from each side of the butterfly valve are mounted in the valve housing, and the valve pivots on these shafts.

One end of each torsion spring is attached to the housing and the other end to the shaft. The torsion springs tend to rotate the valve. The release pin is pivoted from the valve housing with one end engaging the catch on the valve. When the other end is pulled down, the pin disengages the catch and the torsion springs force the valve open, allowing the air to

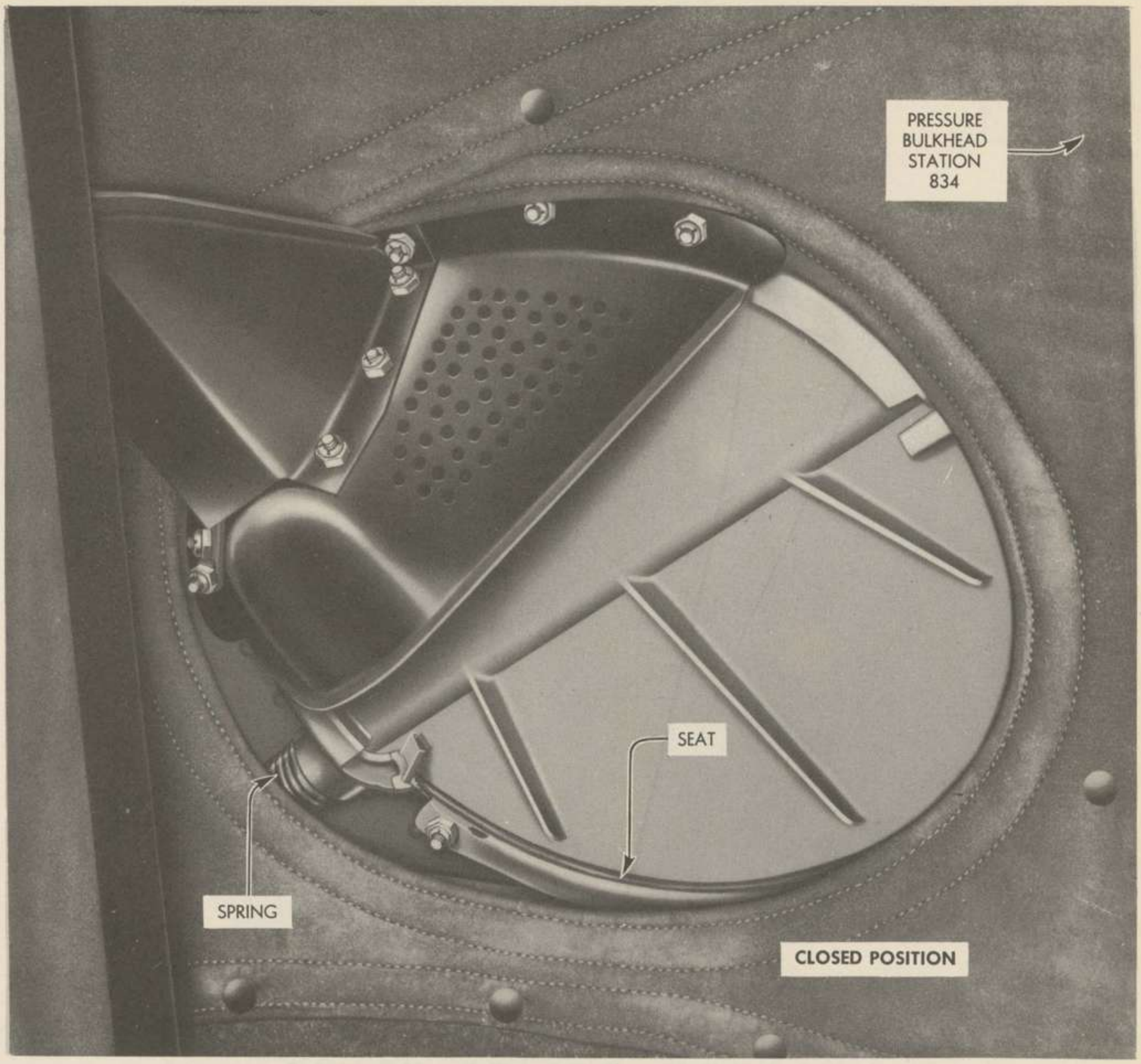

EMERGENCY PRESSURE RELEASE VALVE

escape into the unpressurized tail section, aft of the rear pressurized compartment. A tension spring is fastened to the clip on the back of the valve. When the unit is installed, the other end of the spring is attached to the pressure bulkhead. This spring helps the torsion springs to open the valve.

Four small metal-covered rubber bumpers prevent the valve from rotating past the full open position by striking against a flange on the valve housing. When closed, the valve seats against rubber sealing strips fastened to the housing. A cable attached to the release pin runs to two pull handles, one near the front bulkhead of the forward pressurized compartment and the other to the left of the pilot's seat. Pulling either of these handles releases the valve and the cabin pressure.

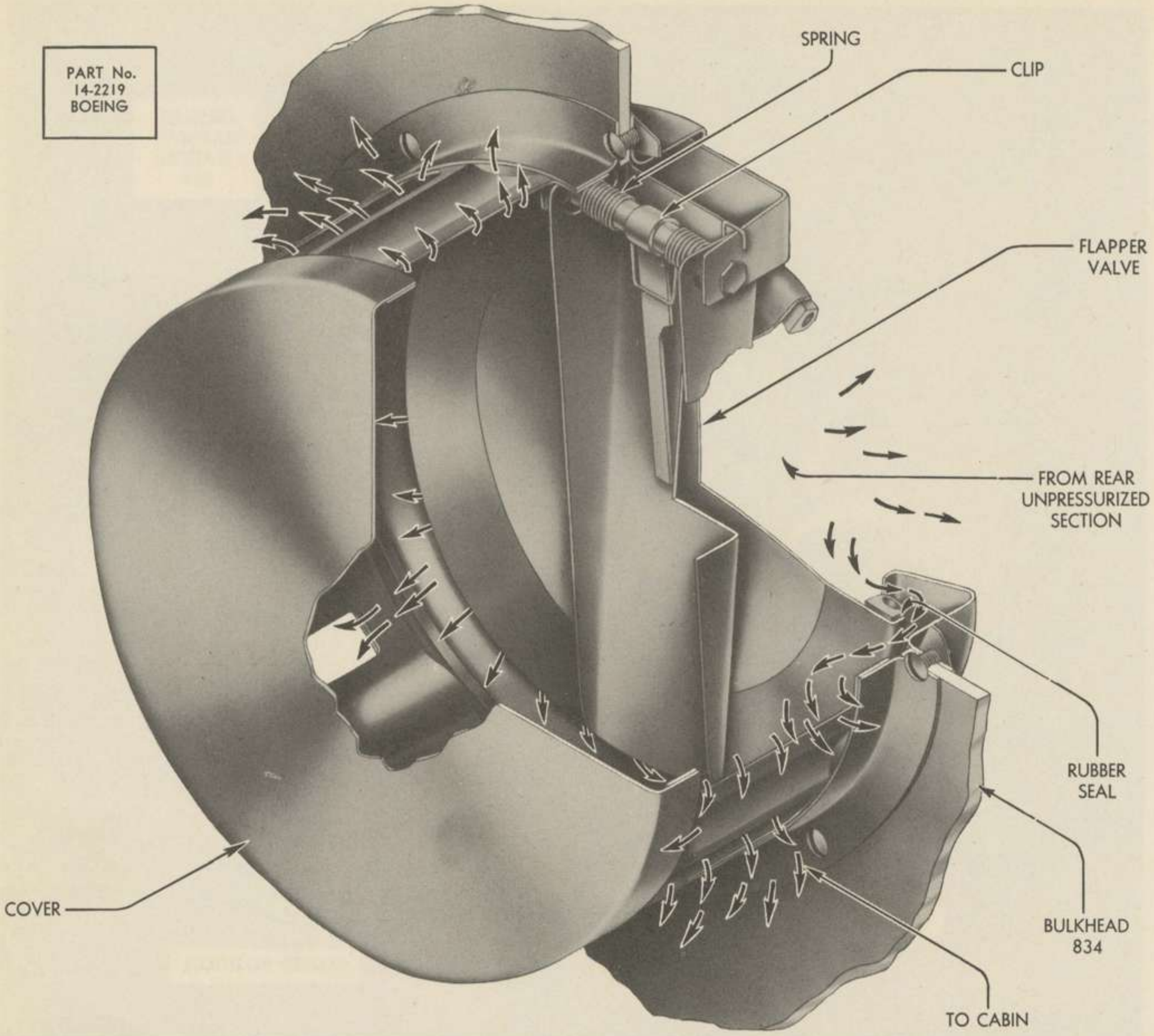

VACUUM RELIEF VALVE

PURPOSE: To prevent the pressure in the pressurized compartments from falling below outside pressure by allowing air to enter into the pressurized compartments when this condition occurs.

LOCATION: The vacuum relief valve is mounted in the rear pressure bulkhead of the rear pressurized compartment to the left of the bulkhead door.

OPERATION: The vacuum relief valve consists essentially of a spring-loaded flapper valve, a valve seat, and a cover. The valve is mounted so that the flapper opens into the rear pressurized compartment. When the air pressure in the unpressurized tail section aft of the pressurized compartments exceeds the pressurized compartment pressure, this differential pressure pushes the flapper valve open and allows air to flow into the pressurized compartments, equalizing the inside and outside air pressures.

The spring exerts only a small force on the valve and keeps the valve closed when there is no differential pressure on it. The cover protects the valve and seat from damage. A hollow rubber sealing strip cemented to the valve seat provides an airtight seal when the valve is closed. A copper tube, 1/16-inch in diameter, vents the hollow sealing strip so that it may be compressed.

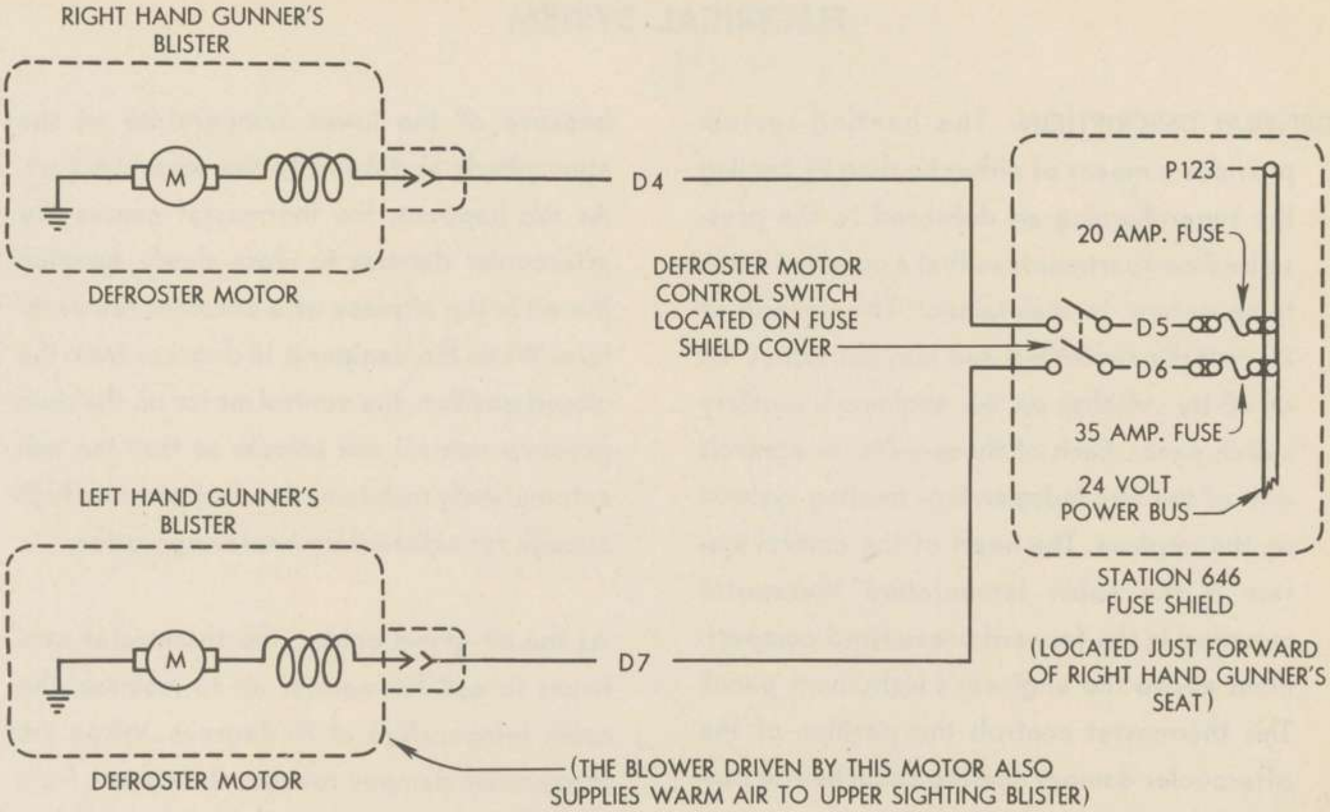

SIGHTING BLISTER DEFROSTER UNITS CIRCUIT

PURPOSE: To direct heated air across the inside surface of the sighting blisters and thus prevent fogging or frosting.

LOCATION: There are two sighting blister defroster units or blowers located one on the left hand side and the other on the right hand side of the airplane, beneath the floor and just forward of the side sighting blisters.

DESCRIPTION: Each defroster unit consists of a high-speed, series-wound electrical motor driving an impeller. Warm air from the heating system ducts is forced by the impeller through the ducts and across the side sighting blisters.

The left hand unit supplies air to both the top and left hand side sighting blisters, while the right hand unit supplies air only to the right hand side sighting blister.

Both motors are controlled by one double-pole toggle switch marked DEFROSTER MOTORS, mounted on the top of the station 646 fuse shield in the rear pressurized compartment. This shield is directly forward of the right hand gun sighter's seat.

DEFROSTER CIRCUIT: The defroster motor circuit is simple and direct. Current for the left hand motor is supplied through a 20-ampere fuse in station 646 fuse shield; current for the right hand motor is supplied through a 35-ampere fuse in the same shield. Current flows from each fuse to its respective motor through the double-pole toggle switch.

ELECTRICAL SYSTEM

GENERAL DESCRIPTION: The heating system provides a means of either heating or cooling the supercharging air delivered to the pressurized compartments so that a constant cabin temperature is maintained. The system is electrically-controlled and may be turned on or off by switches on the engineer's auxiliary switch panel. Each of these switches controls one of the two independent heating systems on the airplane. The heart of the control system is the cabin temperature thermostat mounted in the forward pressurized compartment above the engineer's instrument panel. This thermostat controls the position of the aftercooler damper and the cabin heater output and is set to keep the cabin temperature at 70 degrees Fahrenheit.

The operation of the system through a complete cycle is as follows:

OPERATION: Near the ground, the heat added to the cabin air by the supercharger must be removed to maintain a comfortable temperature in the airplane. This is done by the aftercooler. The flow of cooling air through the aftercooler is regulated by the position of the damper in its cooling air inlet. This position is set by an aftercooler control motor operated by the cabin thermostat. Thus, if the cabin air is too warm, the thermostat causes the control motor to open the damper, allowing more cooling air to flow through the aftercooler.

As altitude increases, the temperature of the air leaving the superchargers decreases because of the lower temperature of the atmospheric air taken into the superchargers. As this happens, the thermostat causes the aftercooler damper to close slowly, keeping the air in the airplane at a constant temperature. When the damper is 15 degrees from the closed position, the control motor on the duct pressure control unit unlocks so that the unit automatically maintains the duct pressure high enough for satisfactory heater operation.

As the air grows colder, the thermostat continues to call for warmer air to maintain the cabin temperature at 70 degrees. When the aftercooler damper reaches 2 degrees from the full closed position, the heater throttle starts to open. When the heater throttle reaches a position of 4 degrees open, the igniter, fuel pump and heater fuel shut-off valve are all energized, and the heater starts to heat the cabin air. This ends the cooling part of the cycle and starts the heating part. The thermostat continues to control the system by controlling the position of the heater throttle, varying the amount of fuel burned to suit the heating needs of the airplane.

As the airplane descends or runs into warmer air, the cycle reverses. The heater throttle closes until it is 4 degrees from the full closed position. At this point, the fuel pump shuts off and the fuel shut-off valve closes, shutting down the heater. When the heater throttle is 2 degrees open, the aftercooler damper starts to open, and the system returns to the cooling part of the cycle.

FIGURE No. 1

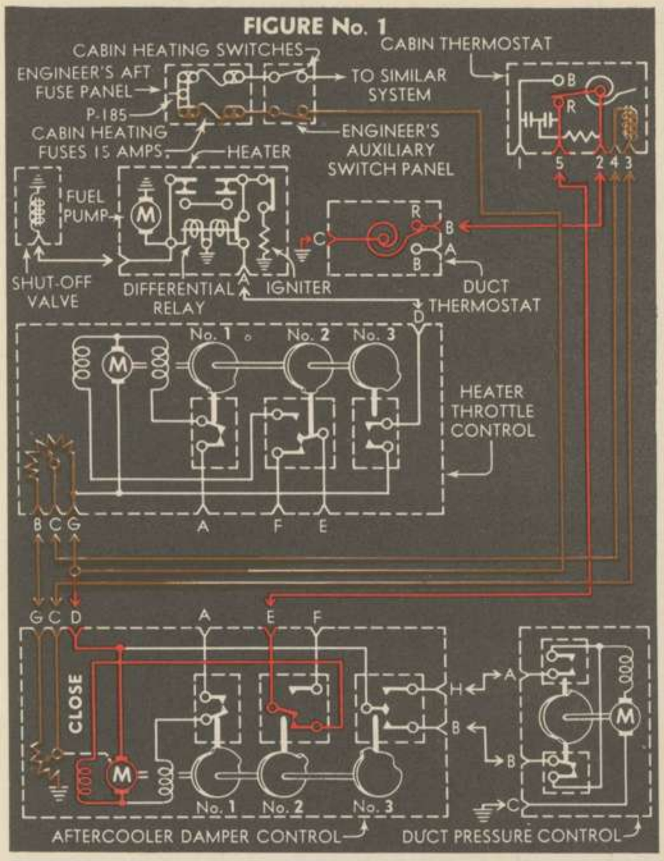

FIGURE No. 2

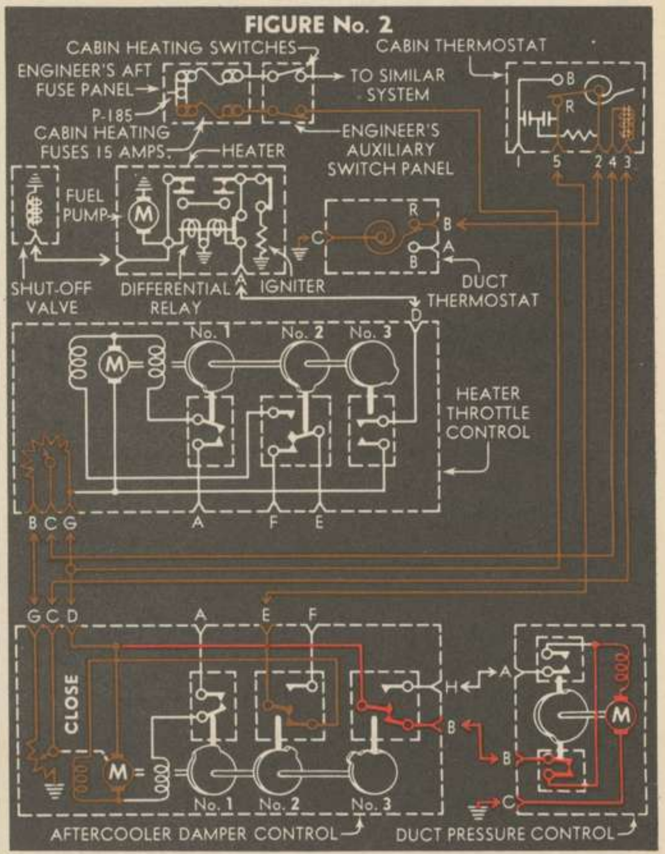

FIGURE No. 3

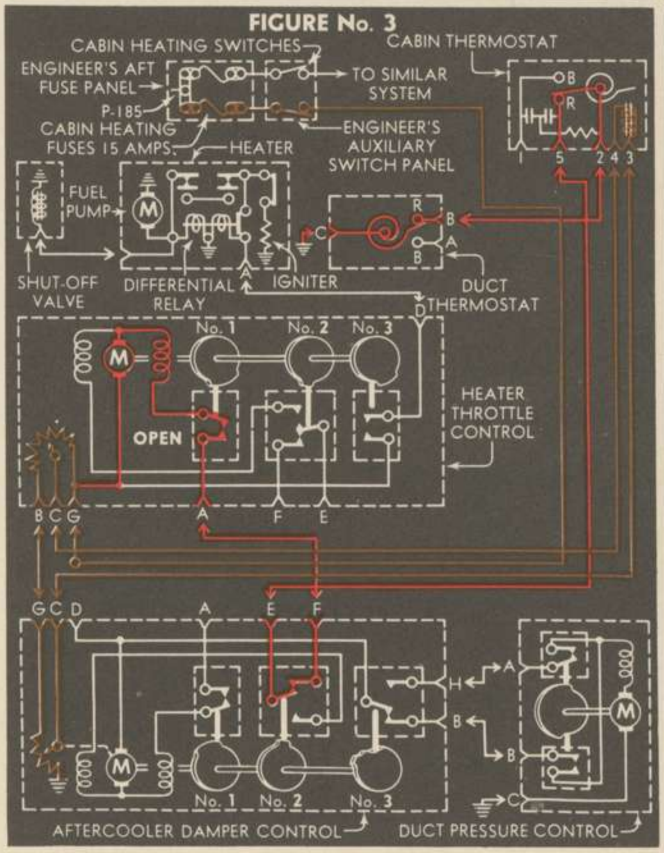

FIGURE No. 4

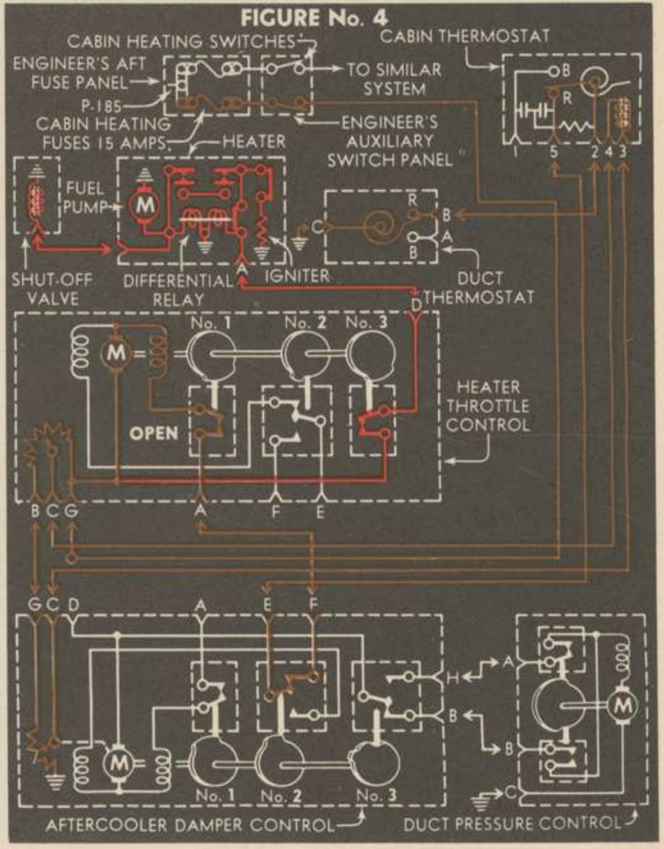

CABIN TEMPERATURE CONTROL CIRCUIT

The electrical circuits involved in the control of the heating system may be traced on the accompanying diagrams, showing the operations step-by-step, starting with the cooling part of the cycle:

(1) When the cabin temperature control switch is thrown, the control system is connected to the airplane's 24-volt power source and is ready to operate. The circuit made by closing the switch is shown by the brown lines. It is assumed that the aftercooler damper is open, and the cabin thermostat is set to raise the cabin temperature. As the cabin temperature decreases, the bi-metal coil spring on the cabin thermostat contact arm makes contact with point R, energizing the aftercooler control motor (red circuit) and causing the aftercooler damper to start to close. The duct thermostat, set to open only if the duct temperature exceeds 310 degrees Fahrenheit, is closed, allowing an electrical circuit to be completed to ground through contact R. As the damper control motor turns, it rotates the wiper on the potentiometer in a clockwise direction. This decreases the resistance in the brown circuit through the cabin thermostat, allowing more current to flow. This increased current flows through an "anticipator" coil in the thermostat and creates a magnetic pull on the thermostat contact arm. This tends to break the contact with point R, and to shut off the aftercooler damper motor before the cabin temperature rises enough to cause the thermostat to move. If there were no "anticipator" coil, the control motors would run from one extreme to another each time there was a change in cabin temperature, because of the delay before a change in the control motors is evidenced in the cabin temperature. The function of the coil is to prevent this hunting tendency by "modulating" the changes in the system.

(2) Inside both the aftercooler control and the heater control motors are three switches operated by cams geared directly to the motors. When the aftercooler damper reaches a position 15 degrees from full closed, switch number 3 closes (as shown), closing a circuit (red line) to the duct pressure control motor. The duct pressure control motor rotates an external locking cam through 180 degrees, unlocking the duct pressure regulator mechanism and allowing automatic regulation of the duct (heater carburetor) pressure. An internal cam traveling at the same speed as the external cam operates a limit switch to break the circuit when the locking cam has traveled 180 degrees.

(3) When the aftercooler damper is 2 degrees from full closed, switch number 2 in the aftercooler control motor breaks the circuit to the motor and closes a circuit (red lines) to the heater control motor, causing it to open the heater throttle. Its circuit having been broken, the aftercooler control motor stops.

FIGURE No. 5

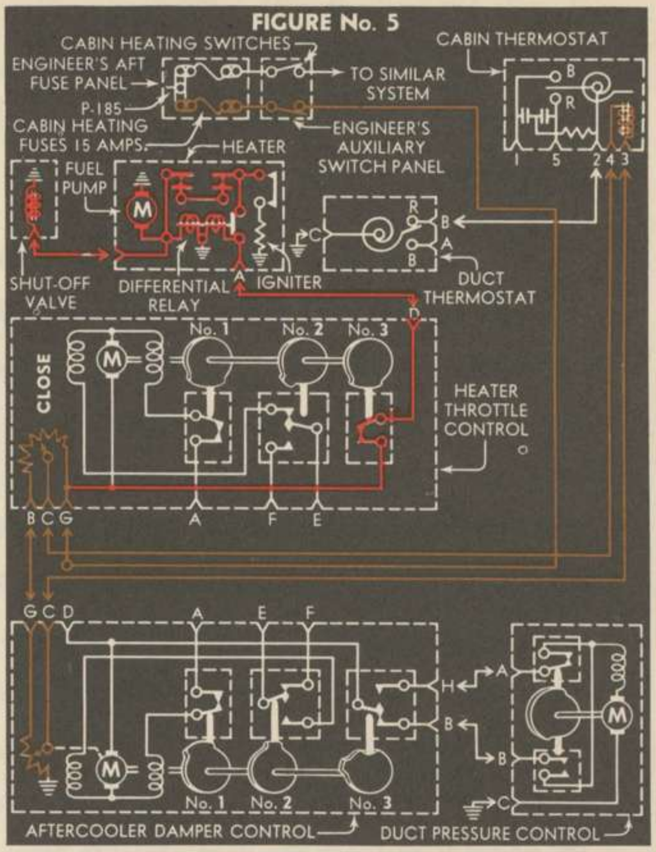

FIGURE No. 6

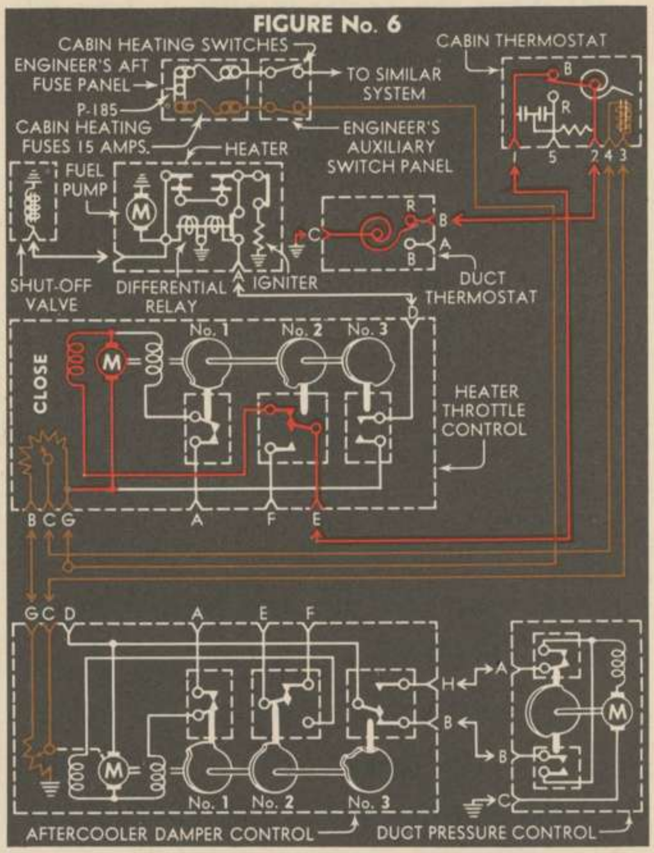

FIGURE No. 7

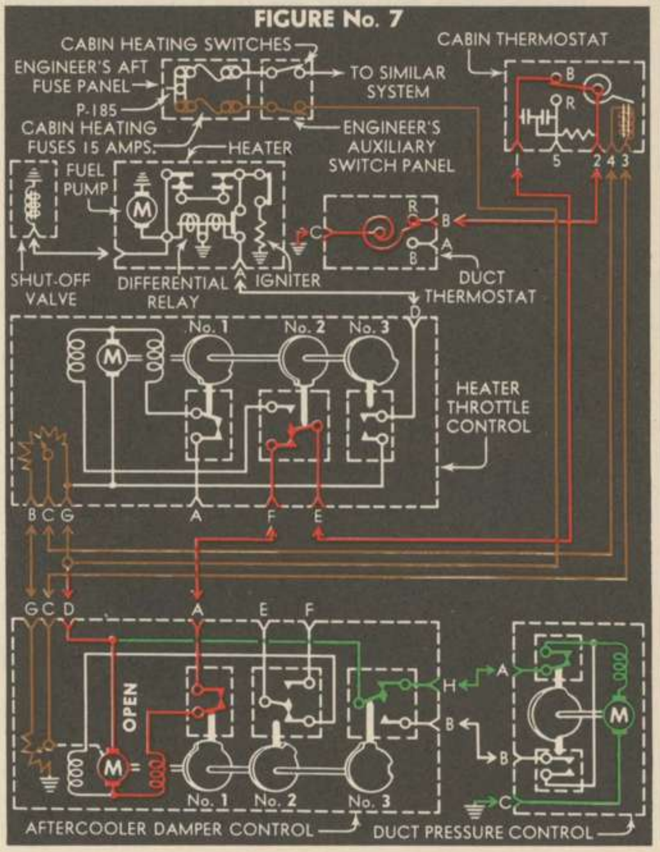

FIGURE No. 8

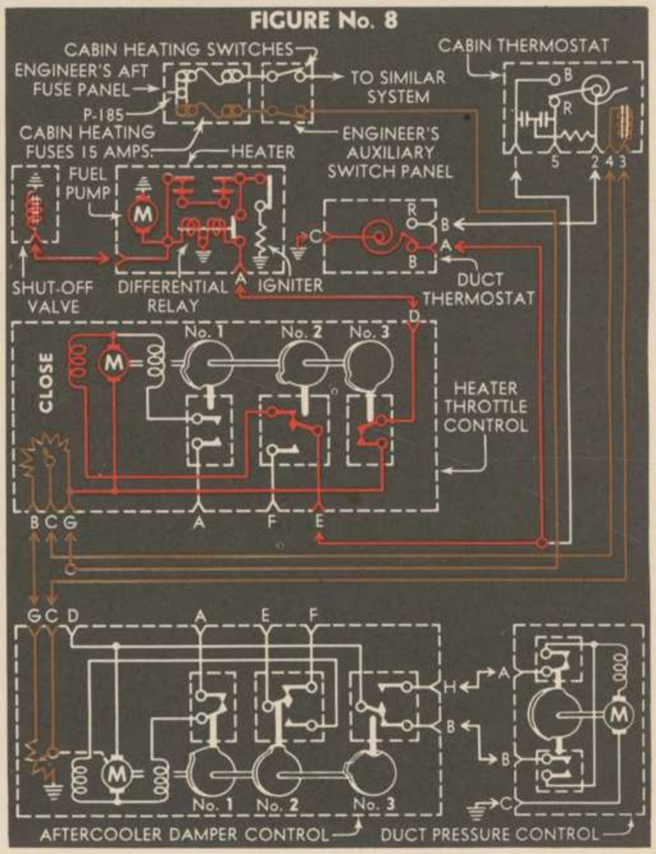

CABIN TEMPERATURE CONTROL CIRCUIT

(4) When the heater throttle is open 4½ degrees, switch number 3 in the heater control motor closes, as shown (red lines), opening the fuel shut-off valve and energizing the fuel pump, the heater igniter and the differential relay. A bi-metallic switch shuts off the heater igniter as soon as the combustion chamber becomes heated. The differential relay is connected into the circuit as shown. It consists of normally closed contacts and two counter-wound coils. One of the coils is in series with the overheat switches in the heater. If one of the overheat switches opens, it breaks the circuit through the coil. The other coil remains energized and opens the relay contacts, breaking the circuits to the fuel pump and shut-off valve.

(5) A potentiometer in the heater control motor serves the same purpose as the potentiometer in the aftercooler control motor in varying the current to the anticipator coil in the thermostat to prevent the system from hunting.

Figure 5 shows a condition in which the demands of the thermostat have been satisfied with the heater throttle in an intermediate position and the heater supplying heat to the cabin air.

(6) When the cabin temperature becomes too high, the cycle reverses. The cabin thermostat makes contact with point B, completing a circuit (red lines) which reverses the heater control motor and starts to close the heater throttle. When the throttle is 4½ degrees from the full closed position, switch number 3 opens, shutting off the fuel pump and allowing the fuel shut-off valve to close.

(7) The heater control motor continues to move the throttle valve until it reaches a closed position. At this point, switch number 2 breaks the circuit to the heater throttle control motor, stopping the motor and transferring control to the aftercooler control motor as shown (red lines). When the aftercooler damper is 15 degrees from the open position, switch number 3 in the aftercooler control motor closes a circuit to the duct pressure control motor, causing the motor to rotate the locking cam 180 degrees and lock the duct pressure regulator controls in the open or inoperative position. This circuit is indicated by the green lines.

(8) If the heater duct becomes overheated, the duct thermostat breaks contact with R and makes contact with B. This by-passes the cabin thermostat and starts the cycle toward cooling, even though the cabin thermostat may be calling for heat.

Only rarely would the complete cycle be encountered, since, due to the anticipator coil in the cabin thermostat, any change initiated in either the aftercooler or the heater has a tendency to cancel itself out at the cabin thermostat, thus promoting smooth and even regulation of the cabin temperature.

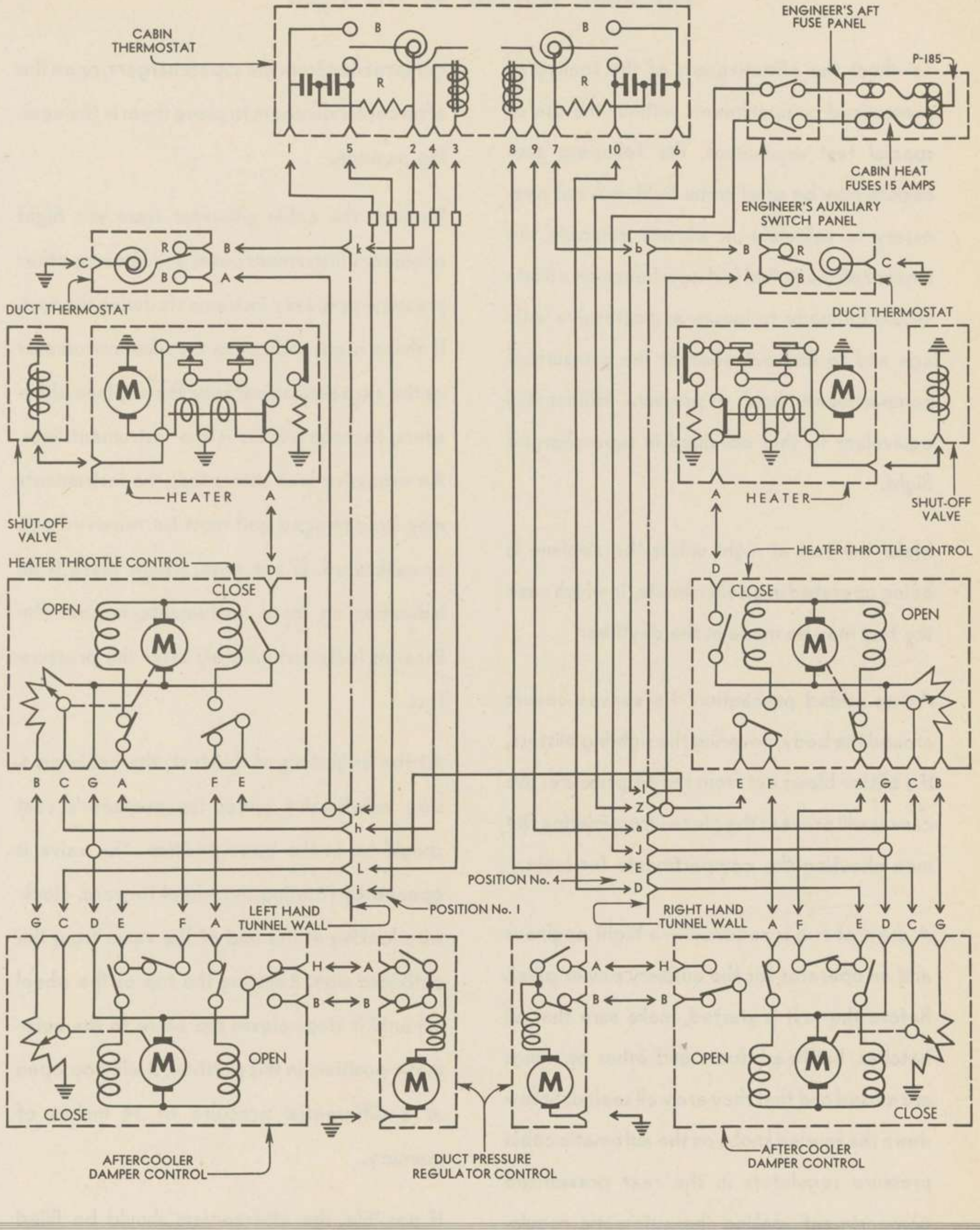

SUPERCHARGING AND HEATING CONTROL CIRCUIT

PRESSURE TESTING IN THE FIELD

To check the effectiveness of the sealing of pressurized compartments without the use of special test equipment, the following procedure may be used in the field. It is not necessary to calculate or closely estimate the amount of the actual leakage; however, efforts should be made to locate any extensive leakage and to find out whether the pressurized compartments hold a pressure differential equivalent to that obtained in supercharged flight.

Make the test at night unless the airplane is being operated in a cold climate, in which case the test may be made in the daytime.

As an added precaution, tie canvas covers around the body, covering the sighting blisters. If a blister blows out from the air pressure, the canvas will prevent the pieces from injuring the men checking the compartments for leaks.

A crew of two is required — a flight engineer and an operator for the auxiliary power plant. Before the test is started, make sure that all hatches, bulkhead doors and other openings are closed and that they are well sealed. Screw down the knurled knobs on the automatic cabin pressure regulators in the rear pressurized compartment, making the automatic regulators inoperative. To help remove the heat of compression from the superchargers, open the aftercooler dampers to place them in the cooling position.

Remove the cabin altimeter from the flight engineer's instrument panel and observe other pressure-operated instruments during the test. If there is any indication on such instruments as the airspeed indicator or the airplane altimeters, there are leaks in the instrument lines. An excessive leak shows that the instruments may be damaged and must be removed and re-calibrated. In any case, where there is an indication on these instruments, inspect the lines for leaks immediately after the pressure test.

At the beginning of this test, the cabin pressure relief valve under the engineer's seat should be in the open position. The valve is opened by rotating the wheel forward, clockwise looking at the end of the valve from the outboard side. Rotating the top of the wheel aft until it stops closes the valve to the automatic position. In this position, it will pop open at a differential pressure of 14 inches of mercury.

If possible, the aftercoolers should be filled with dry ice (solidified CO_2) just before the engines are started. When the inboard engines are started, the airplane should be facing into the wind.

After starting the inboard engines, run them up to 900 or 1000 rpm. At this speed, the cabin superchargers should be delivering their normal output. The emergency cabin air levers on the engineer's control stand should be checked in the open position. When the engines are running at 900 to 1000 rpm, and the valve below the engineer's seat is open, there will be a noticeable circulation of air going out the valve mentioned above. This valve should then be slowly closed while observing the cabin differential pressure gage located in the lower inboard corner ot the engineer's instrument panel. This gage is calibrated in inches of mercury.

The intended operating pressure in flight is 13 inches of mercury differential ($6\frac{1}{2}$ pounds per square inch). If this pressure can be attained when the valve below the seat is screwed completely shut, there are no serious leaks in the pressure sections. Since this valve will open at 14 inches of mercury, when the valve is closed enough to register 13 inches on the gage, the engines should be cut back to idle and then shut off.

Run this test as quickly as possible, as excessive temperature may be encountered in the cabin. If 13 inches of mercury cannot be obtained, close the valve completely. If it is still not possible to obtain 13 inches of mercury, check the doors, seams, windows and any repaired section of the pressurized cabins and the tail gunner's enclosure for leaks. This may be done by shielding the section to be tested from the propeller blast and applying soapy water with a brush or other suitable means. Soap bubbles will show where there are leaks.

Before attempting any repair on any pressurized section of the body, plan the work carefully in advance. All skin patches should be applied on the inside and sealed with a suitable sealer such as thick primer. All rivets should be dipped in primer or other suitable sealant just before driving.

WARNING: Check the portion of the forward pressurized compartment near the propellers with both propellers running. However, any excessive leak in this portion may be found by running only one inboard engine and checking the body on the opposite side and then reversing the procedure. The inside of the nose wheel well and the pressure bulkheads may be checked with both engines running.

NOTES

LANDING GEAR

B-29 AIRPLANE

LANDING GEAR

TABLE OF CONTENTS

LANDING GEAR

GENERAL DESCRIPTION: The units comprising the B-29 airplane's tricycle type landing gear consist of a dual nose wheel, two dual main wheels and a tail skid. All four units may be fully retracted and enclosed in flight. When the landing gear units are extended, the drag or air resistance of the airplane is more than doubled; therefore, the landing gear should be retracted as soon as possible after take-off.

The tricycle type landing gear allows full use of the brakes for stopping after landing on short fields, eliminates ground looping tendency and allows the airplane to be in a nearly level position for ground operations. These advantages outweigh the disadvantages of the tricycle type landing gear such as; longitudinal instability when the nose wheel is off the ground at take-off, the necessity for a retractable tail skid, and the tendency of the nose gear to shimmy.

The dual wheel arrangement allows use of relatively small wheels eliminating the complications which would be otherwise experienced in retracting larger-sized single wheels. The dual wheel arrangement also results in contact pressures with the runway being lower than with single wheels, eliminating the necessity for special runways for an airplane of the weight of the B-29. If one nose wheel tire is blown out on landing, the airplane will continue to roll straight.

Main wheels and tires are interchangeable with those on the later B-17F, the B-17G and the B-24 airplanes.

All four units, including the tail skid, absorb ground contact shock loads through air-oil type shock struts. The nose gear was designed for a vertical load of 50,000 pounds and the main gear units for 160,000 pounds each.

All of the units are retracted or extended by electrically-driven screw mechanisms. Either of two motors drive each of the main gear units and the nose gear retracting mechanisms. One motor is powered from the normal landing gear circuit and one from the emergency landing gear circuit. The two motors cannot be operated at the same time. A single motor is provided for retraction and extension of the tail skid. No provision is made for emergency operation of the tail skid, since the skid, in a normal landing, does not make contact with the ground. Electrically-driven screw mechanisms open and close the nacelle wheel well doors. Nose wheel doors are operated mechanically by a spool on the nose gear contacting a linkage on the doors which pulls them shut as the nose gear is retracted, and pushes them open and locks them when the gear is extended.

During normal operation, all four landing gear units are retracted or extended simultaneously by the normal motors. After the main gear units are fully retracted, the nacelle doors close, covering the wheel wells.

To minimize the peak electrical load in emergency operation, the emergency motors are energized in sequence, beginning with the nose gear. When the nose gear is fully extended the left main gear extends and when the left gear is fully extended the right main gear extends. When the emergency system is used, the nacelle door actuating screws are released from the doors by operation of a cable system, so that the doors will drop open. The doors then cannot be closed by emergency means, but if normal power is restored, they can be closed by extending the screws until they engage the doors and then raising the doors in the normal manner.

Approximately one minute is required to retract the landing gear units with the normal system. More time is required when the emergency system is used. The extension time required is somewhat less in both cases. In later airplanes, a manual means for extension and retraction of the main gear units and the nose gear may be provided in place of the present electrical emergency system.

Three A2301 Grimes spot lights are provided to illuminate the landing gear for night operational checks. A light is mounted on the inboard side of each nacelle wheel well and one in the nose wheel well.

A single-pole ON-OFF toggle switch located on the engineer's auxiliary panel, controls these lights. Power is fed through a 15-ampere fuse in the engineer's forward fuse panel. A convex lens is held in place over the lamp by a snap-on spring lock. Each lamp has 50 candlepower.

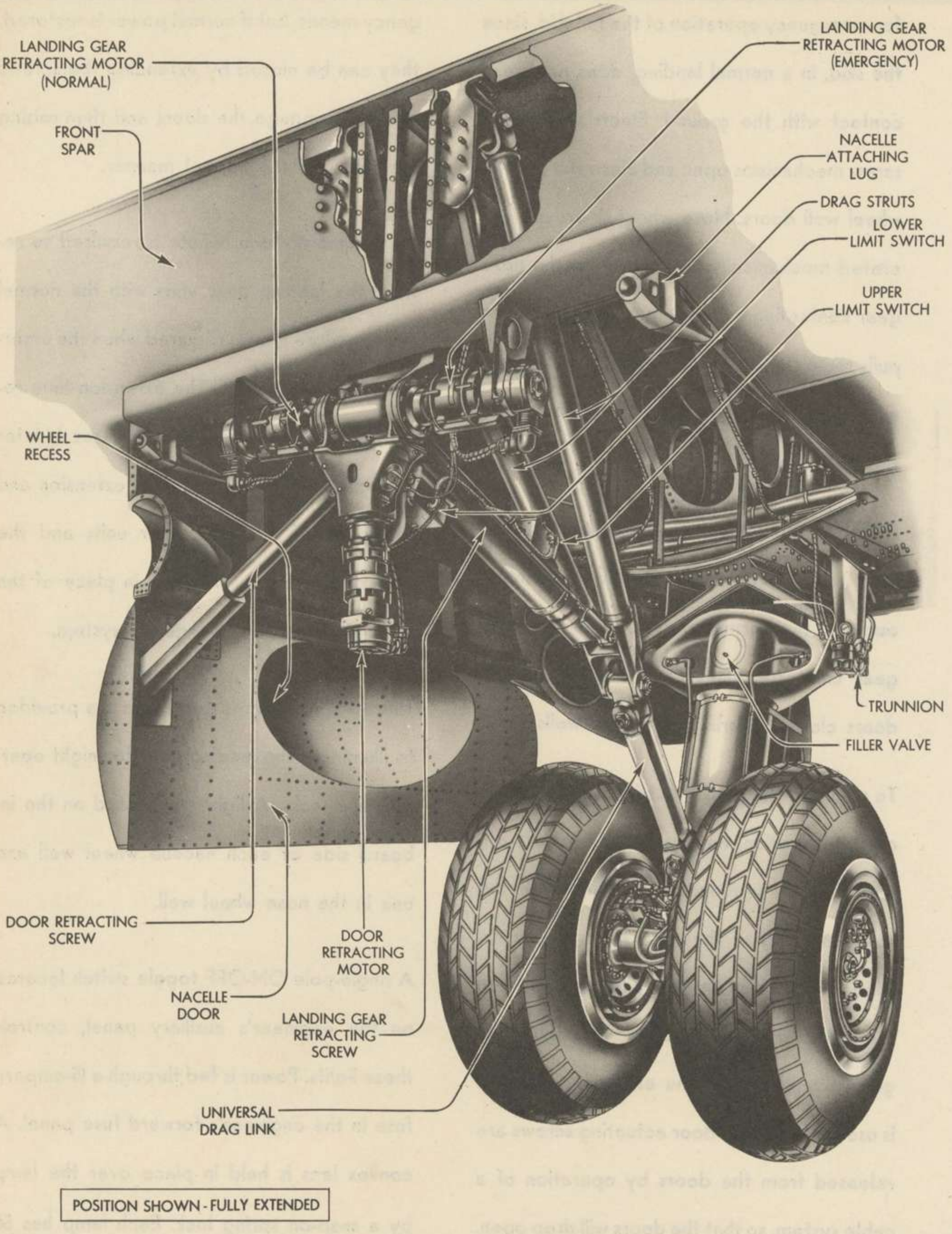

MAIN GEAR RETRACTING MECHANISM

MAIN LANDING GEAR

GENERAL DESCRIPTION: Each main landing gear consists of dual tires and wheels, a shock strut, a drag strut assembly, a retracting screw mechanism, a universal drag link, nacelle door actuators and motors.

Each main gear unit weighs 3302 pounds and is designed to take a load of 160,000 pounds. The shock strut is inclined forward so that the resultant force of the vertical landing load and the drag load is along its axis. The shock strut is stabilized by the drag struts and the universal drag link which are held in a straight line by the retracting screw mechanism when the gear is extended. The drag strut and universal drag link transmit drag and anti-drag loads to the front spar. The shock strut trunnion and its support fittings on the rear spar resist all side loads. Drag struts are hinged at their upper ends to fittings at the top of the wing front spar.

The retraction motors and mechanisms are mounted on fittings attached to the aft face of the wing front spar and extend below the spar.

CAUTION: These fittings will tear away from the spar if, while supporting the weight of the airplane, the gear is retracted by a five-inch movement of the retracting screw.

When the main landing gear units are retracted, the actuating screw is extended to its full length, pushing the lower end of the drag strut assembly up into the wheel well. When this has occurred, the universal drag link will have pulled the shock strut into a nearly horizontal position. The universal drag link has a universal fitting at each end to prevent side loads from being imposed on the drag strut assembly.

When the gear is fully extended, the maximum permissible misalignments of the drag strut and universal drag link are as follows:

UP	¼ inch
DOWN	½ inch
HORIZONTAL	¼ inch to left or right

Vertical alignment is measured from a plane passing through the hinge points at the upper ends of the drag struts and the top and bottom hinge points of the universal drag link. Horizontal alignments are measured from a straight line through the centerline of the universal drag link and bisecting the V of the drag strut assembly.

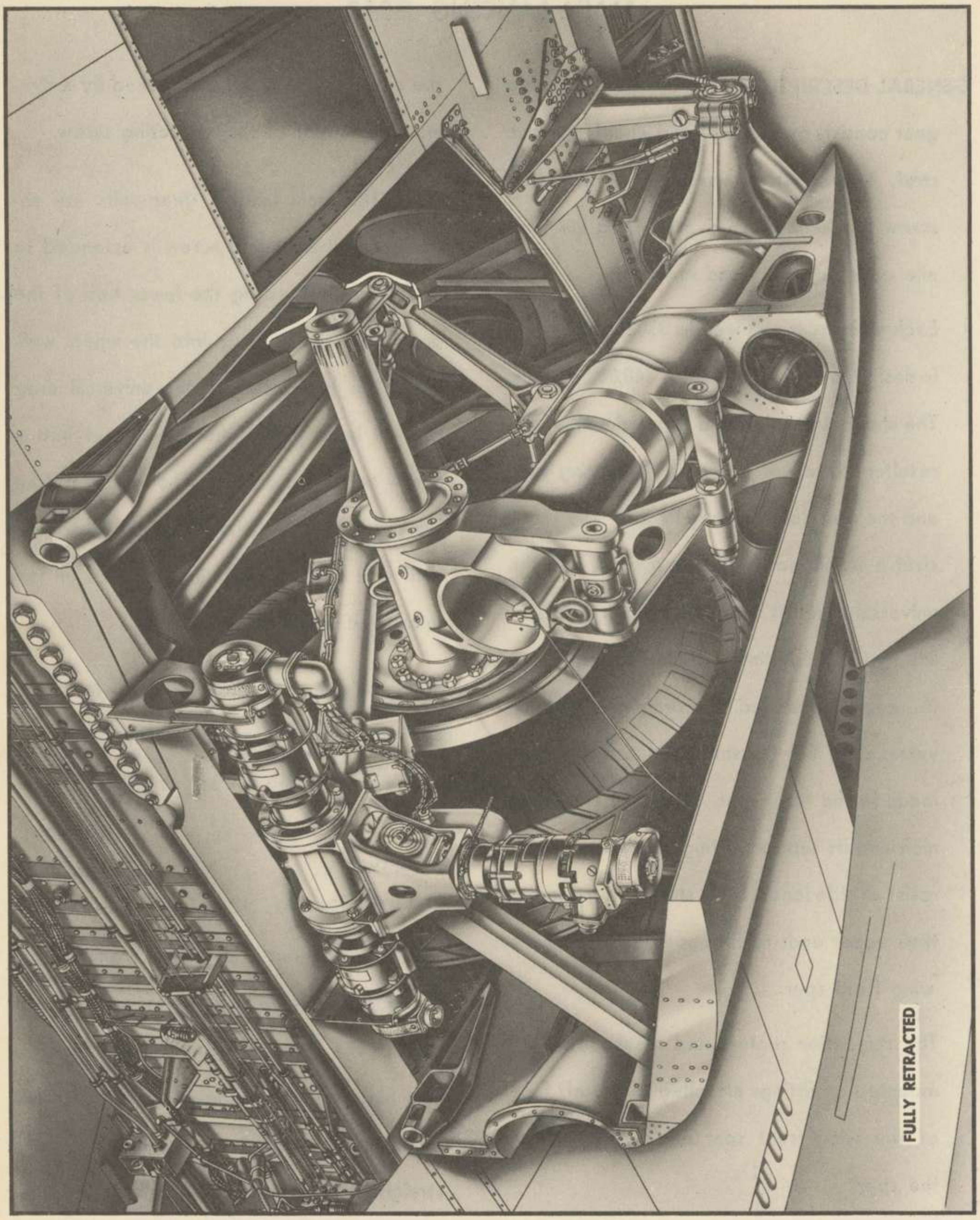

MAIN GEAR RETRACTING MECHANISM

Tires have 16-ply, 56-inch diameter, nylon cord casings and puncture proof inner tubes. Main gear tires should be inflated to a rolling radius of 23.3 inches. Tire casings must always be of the triple-bead type as failure may occur with dual-bead types. With reasonable operating technique, tire casings should be good for 100 to 150 landings. Under-inflation and the excessive use of brakes, lowers these figures considerably. Wheels and brakes are discussed in the HYDRAULIC SYSTEM section.

Wheels can be removed without jacking the airplane. Tow the airplane so that one wheel of the pair rides up on a ramp block, lifting the other wheel from the ground. The block must be about 6 inches high, 15 to 20 inches wide, and long enough to provide a three-foot ramp at each end with enough flat surface on top so that wheel chocks can be placed fore and aft of the wheel.

Main landing gear units are completely enclosed in flight. When the nacelle doors are closed, they fair to the inboard nacelle contours. The pair of doors for each nacelle is opened or closed by two actuator screw mechanisms which, except for length, are identical to those used to operate the bomb doors. Nacelle door actuators are two inches shorter than those used for the bomb doors. (See BOMB DOOR and NACELLE DOOR ACTUATOR in the ARMAMENT section).

An electric motor in each nacelle operates the two actuators at the same time through a Y drive gear box. Nacelle door motors are interchangeable with nose gear motors. The gear box is mounted on the bottom of the main gear retraction motor support, and the motor is mounted vertically below the gear box. The limit switches for the nacelle door motor are in a housing mounted on the Y drive gear box.

Nacelle doors are hinged to the nacelle fairing by continuous hinges along their length. Actuators are attached at the forward end by an adjustable universal joint fitting. When removing a main landing wheel, it is necessary to swing the corresponding nacelle door out of the way so that the wheel can be slipped from the axle. Disconnect the actuator at its lower end.

RETRACTING SCREW MECHANISM

PURPOSE: To extend and retract each main landing gear unit and the nose gear.

LOCATION: There is a retracting screw mechanism on the nose gear and on each main landing gear.

OPERATION: The retracting screw mechanisms of the main landing gear units are identical. The screw mechanism of the nose gear is similar to, but smaller than, those of the main gear units.

The main gear retracting mechanism is composed of the following: a gear box capable of being driven by either the normal or the emergency motor; the screw turned by a bevel gear in the gear box; the nut and nut-tube attached to the drag struts of the landing gear; the stops and bumpers; the dust covers; and the limit switches mounted on the dust covers.

Movement of the main landing gear units is such that the screw mechanism is extended when the landing gear is retracted. However, the screw mechanism of the nose gear shortens to retract the nose gear. For complete retraction or extension, the screws of the main landing gear units turn 64½ revolutions.

The gear box for each main retracting screw mechanism is mounted in bronze bushings hung in two forged brackets attached to the aft face of the wing front spar. Normal and emergency motors are bolted to either side of each of the two brackets through a steel sleeve which fits over the bushings around each end of the gear housing. The retracting mechanism is free to swing in a vertical plane. Bearings are lubricated through lubricator fittings in the brackets. The bronze bearings are grooved to obtain good distribution of the lubricant.

The bearings are secured on the housing by a short radial pin flush with the bearing surface.

The housing is made up of two steel forgings welded together. Contained in the housing are bevel gears with a reduction ratio of 1.33 to 1. The small gear is keyed to a hollow shaft into which the normal and emergency motor shafts are inserted and keyed. The shaft is mounted in tapered roller bearings to take both radial and thrust loads. Seal rings hold the bearings in place and prevent the loss of the gear box lubricant past the bearings. Near each end, the hollow shaft is fitted with a special washer retained by a pin. The washer acts as a stop for the two keys which lie in keyways in both the motor and the gear shafts, preventing the loss of the keys inside the gear shaft.

The larger bevel gear is integral with its shaft. A double-row ball bearing supports this gear. Its shaft is hollow but a plate at the gear end prevents the loss of gear box lubricant into the screw. The aft end of the gear shaft is screwed into the retracting screw and is secured by a clevis bolt through the forward stop fitting, the screw, and the gear shaft.

A spacer ring between the screw and the bearing clamps the ball bearing inner race against the back of the gear. A cap is screwed over the housing to hold the outer race of the ball bearing and to hold a seal which prevents leakage of lubricant past this bearing.

The screw is three inches in diameter and has four Acme threads per inch. The threads are double (2 pitch); that is, there are two continuous threads turned on the screw.

ACTUATING SCREW MECHANISM

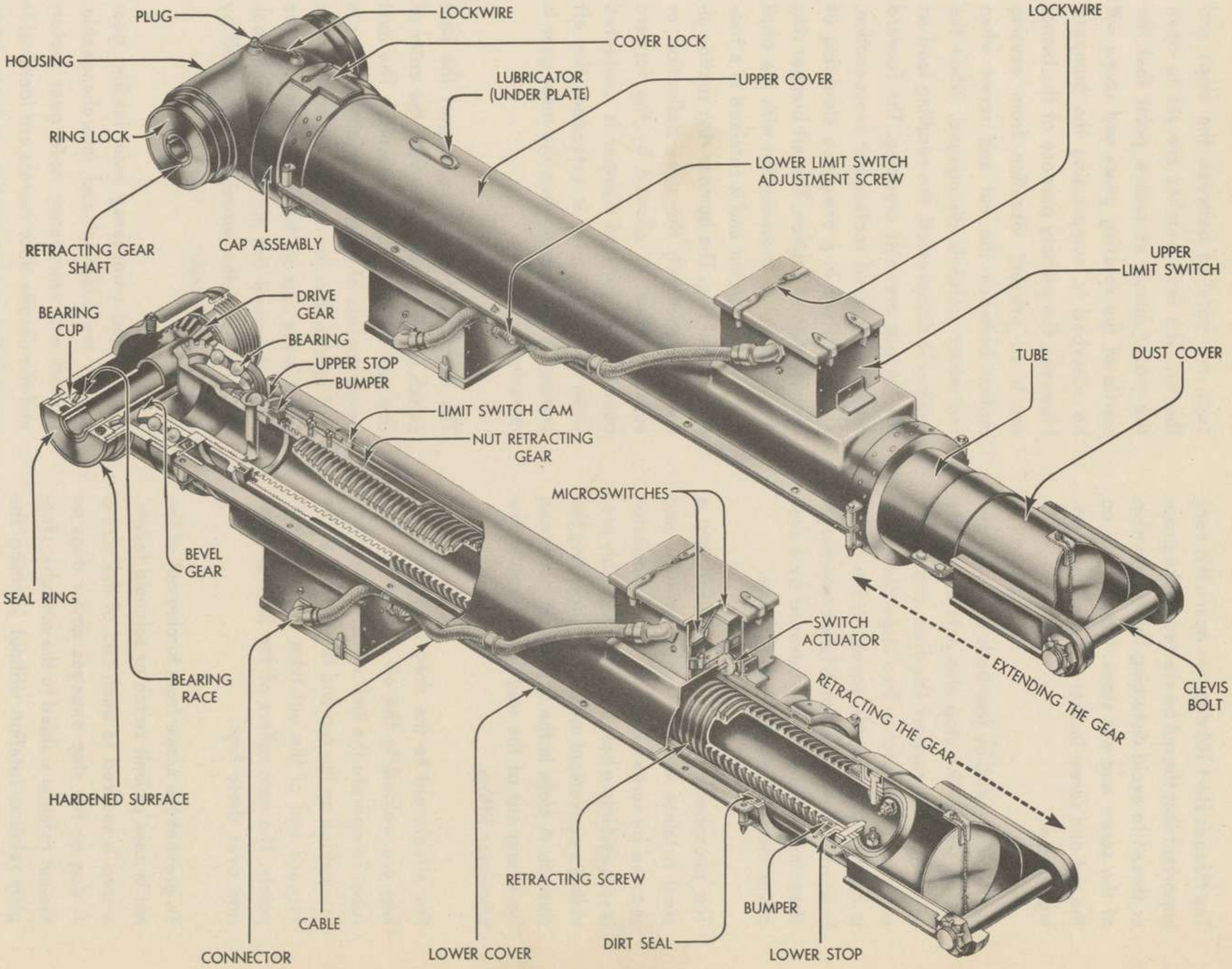

The threads start 180 degrees apart. It is very important that the nut be started on the proper thread to avoid disturbing the relationship of the screw and nut stops. Index marks on the nut and screw indicate the proper starting thread.

A stop is secured by four bolts to the aft end of the screw. The stop also acts as a guide to center and support the free end of the screw in the nut-tube. Two inspection holes in the nut-tube provide access to the flange bolts when the mechanism is fully compressed. These holes are normally covered by a dust cover clamped around the nut-tube.

The phosphor-bronze nut is screwed into a steel retainer welded to the nut-tube and secured by screws into the nut. A lubricator is screwed into a hole in the nut assembly providing a convenient means for lubricating the threads. A plate in the upper dust cover can be swung out of the way for access to the lubricator fitting.

For attachment to the drag strut assembly, lugs are welded to the aft end of the nut-tube. To operate the limit switches, small lugs are welded on the top and the bottom of the forward end of the nut-tube at the proper points. The cam rollers of the limit switches ride over these lugs.

To prevent the screw from turning out of the nut in case of limit switch or solenoid failure, a stop is secured to each end of the screw. A dog on the stop engages similar dogs on the nut retainer welded to the nut-tube, stopping relative rotation without jamming the threads.

Neoprene bumper rings, retained in steel cups, are installed between the stops and the nut. The limit switches are set to open the motor circuit at such a point that the inertia of the rotating gears and screw will be absorbed in compressing the bumpers. However, the primary purpose of the bumpers is to prevent vibration from causing motion between the nut and screw when the motor clutch is disengaged. When the bumper is compressed, the resulting load on the threads prevents creeping. The forward bumper ring is of rectangular cross-section, and is retained in a one-piece steel ring of channel-shaped section. The aft bumper ring is of trapezoidal cross-section with the small end toward the nut and is retained in a two-piece steel ring. The bumper ring section allows approximately the same deflection, or screw rotation, as allowed by the forward bumper. The forward bumper is contacted when the main gear is extended; the aft bumper is contacted when the main gear is retracted.

The dust cover serves to support the limit switch housings, and to prevent the entry of dirt and dust into the mechanism. The dust cover consists of two halves, joined by bolts and screws. The forward end is hooked into a slot in the cap on the gear housing. At the aft end around the nut-tube is a felt seal. The aft end of the nut-tube is closed off by a metal dust cap.

Normal and emergency main landing gear motors are identical and interchangeable. Normal and emergency nose gear motors and the nacelle door motors are identical in construction and operation and are interchangeable, although they are smaller than those of the main landing gear units.

Retraction motor units are made by Eclipse, but on later airplanes General Electric units will be used. The Eclipse unit consists of a high speed motor, planetary reduction gearing, a multiple-disc slip or torque-limiting clutch, and a solenoid-operated dog (engaging) clutch. Ball bearings are used throughout.

The 24-volt direct current, series-wound motor is reversible. The brushes are suitable for use at high altitude.

The reduction for the nose gear motors is 28 to 1; that for the main gear motors is 100 to 1. A double set of planetary gears is used; the first spider carries the planet gears of the first set and the sun gear of the second set. The disc slip clutch anchors the second set of planet gears.

The slip clutch limits the torque transmitted to the screw mechanisms so that they cannot be overloaded. The clutch of the main gear motor slips when the torque exceeds 4500 inch-pounds. The nose gear motor clutch torque setting is 1200 inch-pounds. The slip clutch is an assembly of two sets of spring-loaded discs splined indirectly to the output shaft, through the planetary gearing. One set of plates is steel, the other set is of self-lubricated material, sandwiched alternately between the steel plates. The breakaway torque is adjusted by disassembling the unit and screwing the spring retainer to increase or decrease the compression of the multiple springs.

The shaft from the torque-limiting clutch is connected to the unit output shaft by a solenoid-operated, dog clutch. At the same time the motor is energized, the solenoid is energized, pulling the clutch into engagement. This type clutch allows the rotating parts of the motor drive to "coast" to a stop without transferring this rotation to the retracting screw when the motor circuit is opened. Another function of the clutch is to disconnect the "dead" load of the unit from the output shaft when it is necessary to use the emergency motor, so that the disconnected unit will allow free rotation and not cause drag.

The output shaft of the unit is supported in a double-row ball bearing. Its inner end is cut to include six teeth on the end face. These teeth have a 1½ degree negative rake on each side. The clutch teeth on the driving half of the clutch are identical. The sliding member of the clutch, the driving part, is keyed to the driving shaft by steel balls in longitudinal slots so that it can be slid along the slots by the solenoid, to engage the driven teeth. When the solenoid is de-energized, a compression coil spring disengages the clutch. Improper limit switch settings can cause progressive failure of the clutch teeth if the retracting screw stops are continually engaged before the motor solenoid clutch is disengaged. (See LIMIT SWITCHES).

The output shaft is keyed to the retracting screw gear box shaft by two square keys set in keyways in both shafts.

MAINTENANCE: No special maintenance is required other than proper lubrication and preventing dust and dirt from entering the mechanism.

SHOCK STRUT

PURPOSE: To absorb the shock loads transmitted to the airplane structure when landing.

LOCATION: The main shock struts are attached by their trunnions to brackets extending down from the rear spar. The nose gear shock strut trunnion is mounted in bearings on the nose wheel well beams.

OPERATION: Except that it is of smaller size, the nose gear shock strut is identical to the main gear shock struts in operation and construction, therefore, only the main shock struts will be described in detail.

When the landing gear touches the ground, the airplane's weight and landing load compresses the struts. The rate of compression is controlled by the metering of fluid in the shock strut from a lower chamber to an upper chamber through a variable orifice, the area of which is varied by a pin secured to the lower end of an inner or sliding cylinder. The fluid is incompressible and its rate of flow depends upon the area of the orifice. When the pin first enters the orifice, the effective area is small so that the strut compresses slowly. This causes the tire to depress first. After the strut begins to compress, the cross section of the pin becomes smaller, enlarging the oritice area, increasing the rate of fluid flow and the rate of compression. From this point, the cross section of the pin increases and thus decreases the orifice area until at full strut compression, the hole is almost blocked. Compressed air above the fluid provides springing action. When the airplane is airborne, the air pressure extends the strut. While the airplane is on the ground, the air pressure will balance the weight of the airplane and the strut will be near its mid position. The net effect of the air-oil design permits maximum resilience for shock absorption with a minimum of rebound.

The shock strut trunnions are mounted in bronze bearings on brackets attached to the rear spar. The universal drag link is hinged to the forward side of a collar at the bottom of the outer cylinder. The upper torsion link is hinged to the aft side of this collar.

The lower torsion link is hinged to the aft side of the knuckle forging carrying the axle. This knuckle forging is welded to the inner cylinder. The torsion links maintain wheel alignment by preventing the inner cylinder from rotating relative to the outer cylinder.

The torsion links are pinned together by a special bolt. Thrust bearings are inserted between the two torsion links and under the nut. The latter bearing eliminates any tendency of the links' motion to unscrew the nut. The nut should be tightened solid then backed off to the nearest castellation. A cotter pin should then be inserted. The bronze sleeve bearings are lubricated through lubricator fittings.

A towing lug for rearward towing is secured to the aft side of the knuckle forging. A static ground wire projects from under the nut of the towing lug. The static ground wire trails along the ground, to discharge any electrostatic charges accumulated on the airplane. A jacking cone is located at the bottom of the knuckle fitting.

The one piece hollow wheel axle is held in the knuckle by four tapered shear plugs. The plugs are arranged in two pairs, secured by small bolts through opposite pairs. When the brakes are applied, the plugs transmit to the knuckle forging the torque induced in the axle by the outer brake assemblies. The inner brake assemblies are bolted to flanges welded to the knuckle forging. (See WHEEL BRAKES in HYDRAULIC SYSTEM section.)

The inner cylinder assembly of the shock strut moves when the strut is compressed. It is composed of the inner cylinder, the orifice pin, the outer piston assembly and the knuckle fitting and axle.

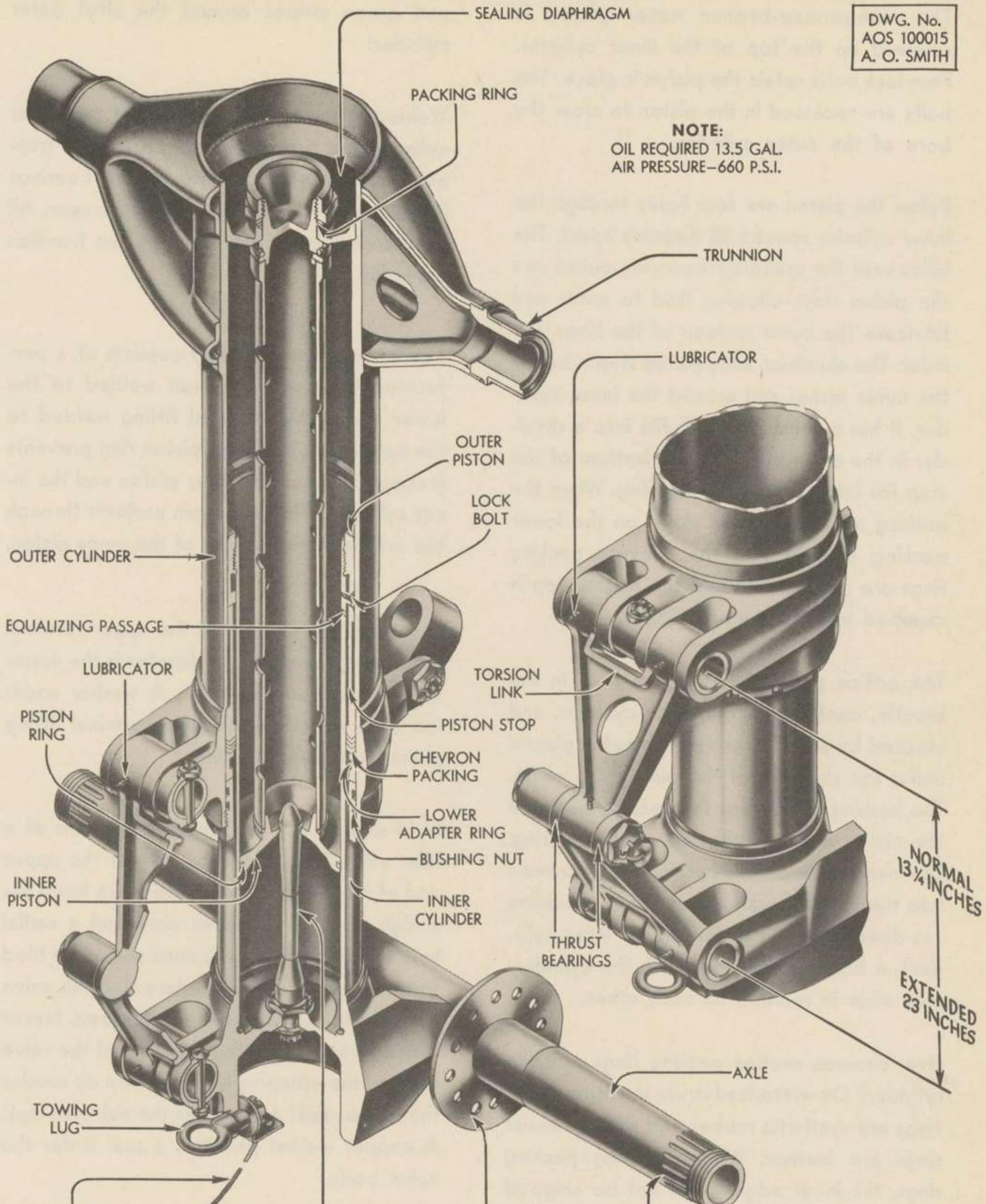

DWG. No.
AOS 100015
A. O. SMITH

NOTE:
OIL REQUIRED 13.5 GAL.
AIR PRESSURE–660 P.S.I.

SHOCK STRUT

The manganese-bronze outer piston is screwed on the top of the inner cylinder. Four lock bolts retain the piston in place. The bolts are recessed in the piston to clear the bore of the outer cylinder.

Below the piston are four holes through the inner cylinder spaced 90 degrees apart. The holes vent the space between the piston and the piston stop, allowing fluid to enter and lubricate the outer surface of the inner cylinder. The aluminum alloy piston stop is below the outer piston and around the inner cylinder. It has a shoulder which fits into a shoulder in the outer cylinder. The bottom of the stop fits into the chevron packing. When the bushing nut is tightened down on the lower packing adapter ring the chevron packing rings are compressed and the piston stop is clamped into the outer cylinder.

The orifice pin is fitted into a hole in the knuckle, centered in the inner cylinder, and secured by a nut. A copper gasket is placed under the shoulder of the pin on the inside. The bushing nut clamps the packing between the piston stop and the lower adapter ring. The manganese-bronze bushing nut is screwed into the outer shock strut cylinder, providing (as does the outer piston on the inner cylinder), a bearing point on which the cylinders may slide in relation to each other.

Five chevron section packing rings seal the cylinders. On winterized struts, the three upper rings are synthetic rubber and the two lower rings are leather. When installing packing rings, the inner edges must not be chipped or damaged. Tar and dirt on the exposed part of the inner cylinder will damage the packing rings. The installation of the leather and the rubber packing rings is indicated by yellow and green stripes around the strut outer cylinder.

Welded around the upper part of the outer cylinder, the trunnion housing holds the trunnion journals which fit into bronze bearings in the brackets attached to the rear spar. All side landing loads are taken by the trunnion assembly.

The inner piston assembly consists of a perforated tube with a piston welded to the lower end and a terminal fitting welded to the upper end. A bronze piston ring prevents leakage between the inner piston and the inner cylinder. The orifice pin projects through the orifice in the center of the inner piston.

A sealing ring fits around the upper terminal fitting and is seated in a chamfer in the upper end of the outer cylinder. A washer under the large nut screwed on the terminal fitting protects the sealing ring.

Fluid and air are introduced by means of a filler valve in the forward side of the upper end of the outer cylinder. The valve body has a high pressure air valve core and a radial hole to its inner bore. Air must always be bled from the shock strut by unscrewing the valve body until the radial hole is uncovered. Never bleed air by depressing the stem of the valve core, as the escaping high pressure air erodes the rubber seat and causes the valve to leak. A copper washer provides a seal under the valve body.

REPLENISHING: Bleed all of the air pressure and remove the valve body. The shock strut should now be fully compressed. Fill the shock strut through the filler hole to the level of the filler hole with approximately 13.5 gallons of hydraulic fluid, AN-VV-0-366a (red color.) This fluid is suitable for all temperatures. Replace and tighten the valve body. Extend the shock strut by inflating it with air to about 660 P S I. This pressure is sufficient to carry the weight of the airplane. In the nose shock strut, 2.35 gallons of fluid are required and the inflation pressure should be about 440 P S I.

After the weight of the airplane has been placed on the shock struts, adjust the air pressure until the distance between the torsion link centers of the main gear is 13¼ inches. This distance should be 10 inches for the nose gear. Notches have been cut opposite the centers on the torsion links and are to be used in preference to the center points.

The struts are designed to operate at these specific center measurements. Over-inflation causes excessive stiffness of the landing gear, resulting in rough landings and rough taxiing. It may be necessary to over-inflate the struts to cause them to break away from the compressed position when first inflated. However, the excess air pressure must be bled off until the stated distance between the torsion pins is obtained.

MAINTENANCE: Except for replenishing the air and fluid, the only maintenance required is replacement of the packing rings if leaks occur. Air leaks in the filler valve require replacement with a new valve. In most cases, leaks around the packing can be stopped by tightening the bushing nut. Do not use excessive force, or damage to the packing rings will result; one-half turn should be sufficient. If this is not effective, the shock strut must be disassembled so that the packing rings can be replaced. It is possible and preferable to remove the inner cylinder assembly without removing the entire strut from the airplane. Place the airplane on jacks and bleed the air from the shock strut. Disconnect the brake lines at the lower swivel joints so that the swivel joints remain with the outer cylinder. Remove the wheels to reduce the weight to be handled. Partially retract the landing gear to such a position that the entire inner cylinder assembly can be removed. Unscrew the bushing nut and carefully extract the inner cylinder assembly.

If the assembly cannot be extracted by hand, the filler valve can be reinstalled, about ¼ of the bushing nut re-engaged, and enough air pressure applied to loosen the inner cylinder assembly. It is wise to lash the assembly so that it will not be blown out of the outer cylinder.

Before the disassembly is complete, the fluid should be syphoned or pumped out through the filler opening, to avoid spilling 13½ gallons of fluid on the ground.

Care should be taken not to damage the inner edges of the new packing rings when they are installed. Cover the threads at the upper end of the inner cylinder by a thin sheet of metal or with masking tape while the packing rings are being placed on the inner cylinder.

NACELLE DOOR EMERGENCY RELEASE SYSTEM

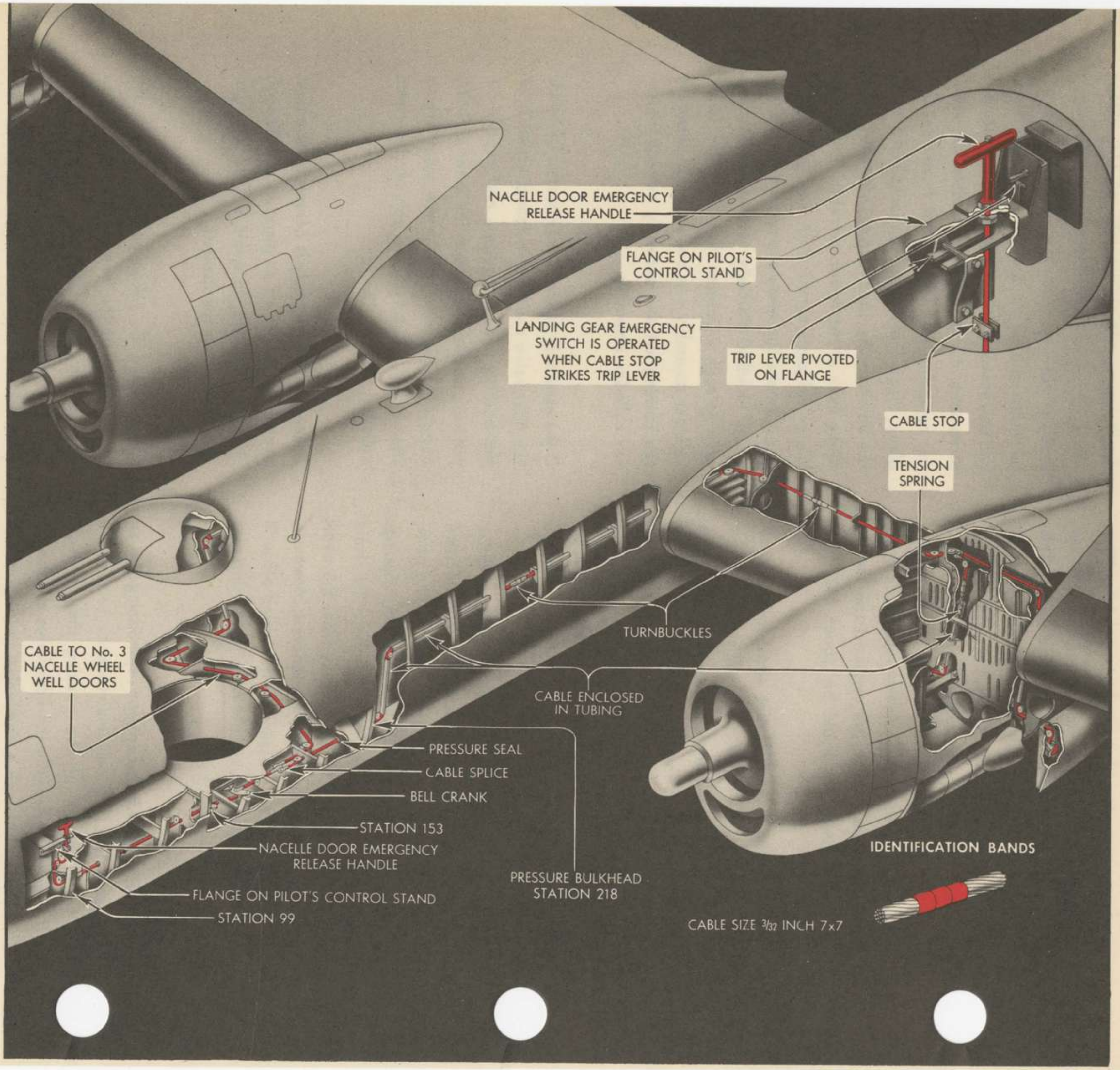

NACELLE DOOR EMERGENCY RELEASE SYSTEM

PURPOSE: To release the nacelle doors from their actuator mechanism so that the doors will drop open to allow the main landing gear to be extended by the emergency motors.

LOCATION: Of the three pull handles on the pilot's control stand, the emergency nacelle door release control handle is the one nearest the rear.

OPERATION: No emergency means are provided for opening the nacelle doors electrically. However, by means of a cable control system, the locking lugs of the actuators can be released from the nacelle doors, allowing the doors to open. Cable runs are shown on the illustration. Slack in the cables is taken up by tensioning springs in the nacelles. The lever arrangement under the left floor of the forward compartment reduces the operating load. Cables are encased in tubes throughout the forward bomb bay to prevent accidental operation by personnel passing along the catwalks.

To use the emergency motors to extend the landing gear, apply power to the emergency power bus either by means of the pilot's POWER TRANSFER switch or the EMERGENCY switch in the battery solenoid shield. (See LANDING GEAR WIRING DIAGRAM). After the emergency power bus is energized, the pilot pulls the emergency nacelle door release control, the initial travel of which releases the doors. Near the end of the travel, a stop on the cable pull engages a lever which contacts the emergency landing gear switch, energizing the "down" emergency motor circuits. After the nose gear has extended, the control circuit is transferred to the left gear, and when it also has extended, the control circuit is transferred to the right gear. The pilot must hold the pull handle out until all landing gear units are completely extended. The landing gear units can be retracted by the emergency motors by holding down the emergency landing gear switch (UP position).

When normal power is restored, the actuator screws can be run down to re-engage the doors. This is done by placing the normal landing gear switch on the aisle stand in the DOWN position, assuming that the landing gear is retracted. At the point when it is observed that the landing gear units start to extend, the switch is placed in the OFF position until the motors have had time to stop. The switch is then placed in the UP position until the gears have again fully retracted.

NOSE GEAR UNIT

GENERAL DESCRIPTION: Components of the nose landing gear are similar in function and operation to those of the main gear units, except that the universal drag link is a yoke and that a self-centering device and a shimmy damper are used.

Ten-ply nylon cord tires on the two smooth contour nose wheels are 36 inches in diameter. No brakes are provided on the nose wheels. Wheels are magnesium alloy castings with tapered roller bearings. Dust covers, on the outboard sides of the wheels on present airplanes, will not be installed on later airplanes. Tires should be inflated to a rolling radius of 15.3 inches, requiring an inflation air pressure of about 47 pounds per square inch.

To aid when servicing the tires and wheels, a jacking cone is located under the center of the spindle. A pair of towing lugs are on the forward side of the spindle just below the knuckle fitting. Holes in the lugs should not be enlarged to take a larger diameter tow bar bolt in an attempt to prevent shearing of the bolt. The hole was designed so the largest size bolt that would fit the holes in the towing lugs would shear under excessive tow loads before damage would occur to the airplane structure.

The spindle, carrying the axle and wheels, is mounted in the spindle housing of the knuckle forging so as to rotate about a vertical axis. (See SELF-CENTERING MECHANISM illustration). The wheel axle is aft of the spindle axis, giving "trail" so the nose wheel will align itself in the direction of the airplane's motion. Use of the vertical spindle axis removes one of the unstable factors contributing to shimmy on conventional type nose gears. A shimmy damper is mounted on the right side of the spindle housing to prevent shimmy from starting (See SHIMMY DAMPER illustration).

The inner cylinder or moving portion of the nose shock strut is welded to the knuckle forging which includes the spindle housing. Torsion links prevent the inner assembly from turning in the outer cylinder of the strut. Needle type bearings are used for the lower bearings of the lower torsion link to keep lost motion at a minimum. This is instrumental in preventing shimmy. Thrust bearings are inserted between the two links and under the nut where the upper and lower torsion links are pinned together. The nut, with the thrust bearing under it, must be tightened solid then backed off to the nearest castellation for insertion of a cotter pin. Bronze sleeve bearings are used at the other torsion link bearings. A maximum clearance of .005 inch is permitted between the moving and fixed parts at the upper and lower torsion link bearings. This clearance is adjusted by fitted washers, so care must be used to prevent loss or misplacement of these special washers when the torsion links are being reassembled.

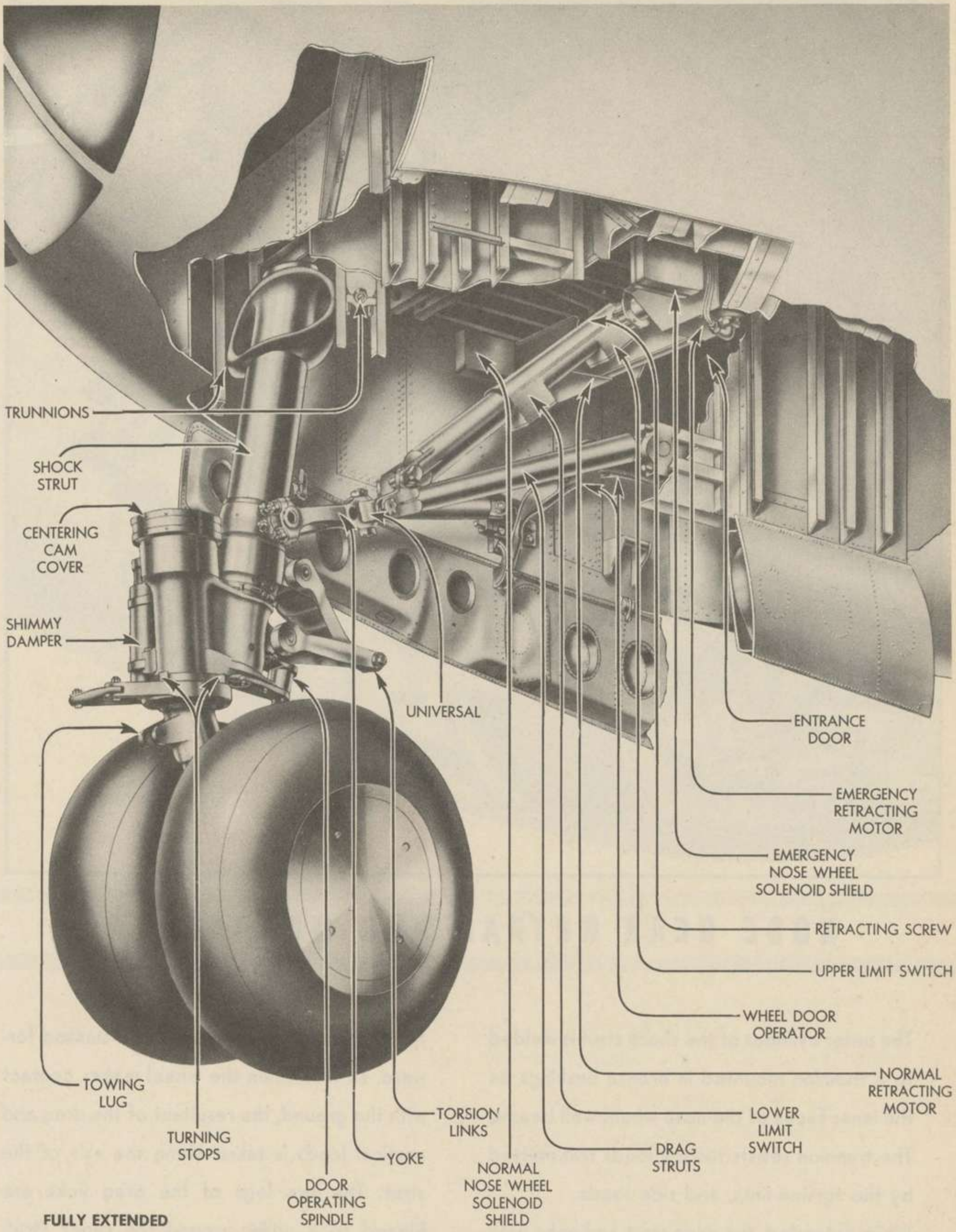

NOSE GEAR RETRACTING MECHANISM

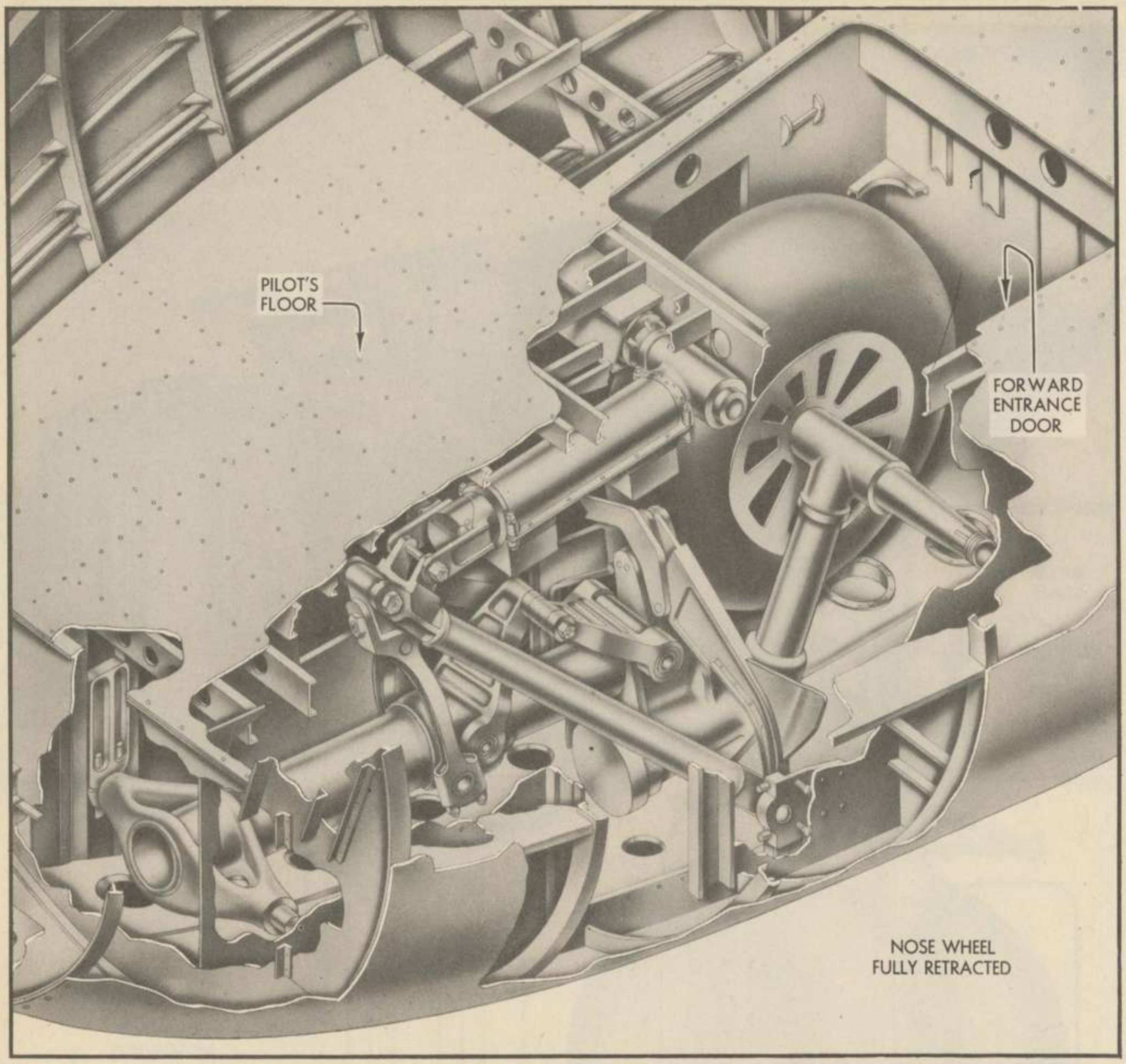

NOSE GEAR RETRACTING MECHANISM

The outer cylinder of the shock strut is welded to a trunnion mounted in bronze bushings on the inner faces of the nose wheel well beams. The trunnion resists torsion loads transmitted by the torsion links, and side loads.

When extended, the drag strut and yoke hold the shock strut with its lower end slanted forward, so that when the wheel makes contact with the ground, the resultant of the drag and vertical loads is taken along the axis of the strut. The two legs of the drag yoke are hinged to a collar around the shock strut.

The upper end of the yoke is connected to the apex of the V drag struts by a universal joint so that side loads will not be introduced into the drag struts. Upper ends of the drag struts are hinged in bronze bearings to the wheel well beams.

The nut-tube end of the retracting mechanism is pinned to lugs on the upper side of the apex of the drag strut assembly. When the gear is fully extended, the retracting mechanism holds the yoke and drag strut joint so that the joint is in the same plane as the other hinge points of the drag members. In this position, the maximum permissible misalignments at this joint are:

Up	1/4 inch.
Down	5/32 inch.
Horizontal	1/4 inch to left or right.

Horizontal alignments are measured from a straight line bisecting the V's of the yoke and of the drag strut.

The operating spool of the nose wheel door operator is mounted in serrated fittings on the aft side of the knuckle forging. The serrations allow an adjustment of the spool. The spool is held between the serrated fittings by two bolts passing through large square holes in the spool, allowing sidewise adjustments to make the spool fit the door operator.

When the nose gear is retracted, the spool engages a trip lever on the inverted V braces of the door operator. The V braces are attached to the doors and are loosely supported fore and aft by phenolic guides on the wheel well beams. The braces are pinned together at the middle. As the gear retracts, the trip lever, which has been holding the braces apart and locked, is forced up by the spool. The spool seats in the braces and lifts them, pulling the doors closed. Adjustable pawls on each door brace, close under the spool, locking the doors closed. When the gear is extended, the spool pushes on the pawls, opening the doors. As the pawls release the spool, the trip lever latches in place, holding the doors open.

All of the door operator and spool adjustments are made by trial and error.

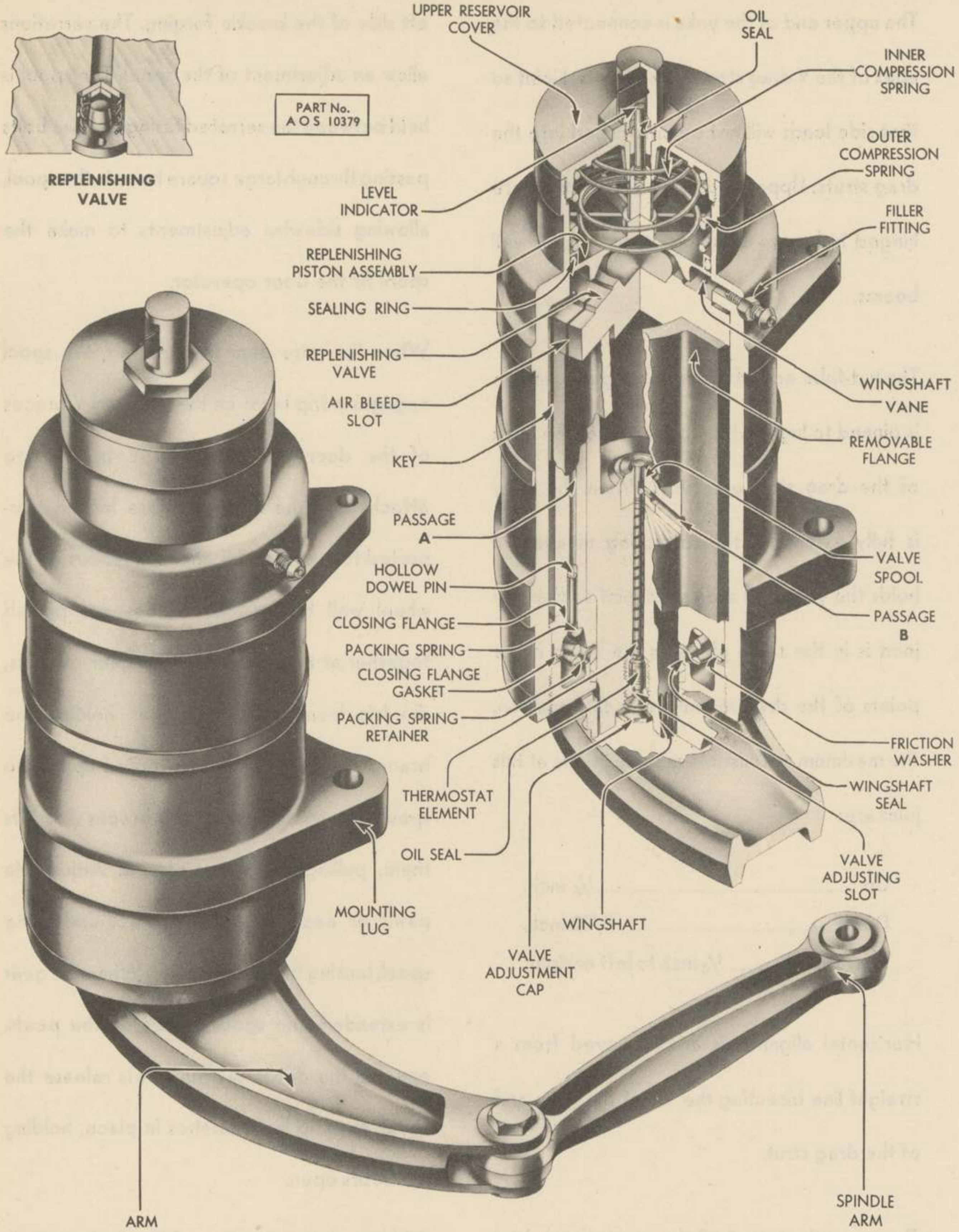

SHIMMY DAMPER

SHIMMY DAMPER

PURPOSE: To prevent shimmy of the nose gear while the airplane is in motion on the ground during take-off and landing.

LOCATION: The shimmy damper is mounted on the right side of the nose gear knuckle, parallel to the spindle shaft, and fixed by four drive-fit bolts through mounting lugs on the damper and knuckle.

GENERAL DESCRIPTION: Airplanes with tricycle type landing gear are subject to a nose gear oscillation comparable to the shimmy sometimes experienced with the front wheel system of automobiles. Oscillations have the nose gear spindle as an axis. By using close tolerance bearings throughout the nose gear system, the tendency is lessened, and any shimmy that may start is readily suppressed by the shimmy damper before the oscillations become violent.

Shimmy dampers are designed around the hydraulic principle that a fluid's resistance to flow is proportional to the square of the velocity of flow. That is, there is little resistance to slow motions, but great resistance to rapid movement. This characteristic is required to allow slow rotation of the nose gear spindle when steering, yet provides great resistance to the rapid oscillations of shimmy.

Essentially, the damper consists of a cylinder with two fixed vanes or abutments, a pair of vanes which are moved, a means of keeping the working chambers full of fluid, and a valve or orifice, thermostatically controlled to compensate for changes in fluid viscosity.

The actuating arm for the damper is connected to the spindle swivel arm by a link. The arm is at the bottom of the shimmy damper so that the length of spindle subject to torsional vibration will be as short as possible. The arm is splined to the wingshaft which has two diametrically opposite vanes lengthwise in the cylinder. Parallel to the rotating vanes and displaced 90 degrees from them are two fixed vanes or abutments keyed to the housing and opposite each other. The abutments fit closely to the wingshaft. When the nose gear is centered, the four chambers formed by the vanes are of equal volume and are interconnected through the valve in the wingshaft. Above the working chamber is a replenishing chamber containing fluid under pressure from a spring-loaded piston. This chamber keeps the working chambers completely filled with fluid.

Rotation of the wingshaft changes the relative volume of the chambers and forces fluid to flow through the ports from the two chambers which are diminishing in volume to the two chambers which are increasing in volume. The resistance to the flow between the chambers is caused by passage of fluid through the wingshaft valve (orifice). The flow resistance of a fluid is subject to changes in fluid viscosity, which, in turn, varies with temperature. This valve is adjusted automatically to compensate according to the temperature for viscosity changes of the fluid, thus maintaining uniform resistance over a wide range of temperature.

Part of the abutment flange assembly closes the top of the working chambers. Four spring-loaded check valves are in this part. The valves allow flow into the working chambers from the replenishing chamber above, but they check any reverse flow. The piston in the replenishing chamber is loaded by two coil springs to maintain a constant fluid pressure in the replenishing chamber. The pressure is relatively small but is enough to force fluid through the check valves to replace any leakage from the working chambers.

An O-section synthetic rubber packing ring in the piston prevents leakage. Excessive fluid loss past the piston renders the unit inoperative. To indicate the level of fluid in the replenishing chamber, a rod attached to the piston extends through a seal into a guard on top of the unit. The proper fluid level is indicated when the end of the rod is opposite the notches in the guard. The rubber and felt seal around the indicator rod prevents the loss of fluid that may have leaked past the piston ring. This seal is necessary only when the nose gear is retracted and the unit is horizontal.

The upper half of the wingshaft is hollow and is sealed at the upper end by a plug staked to the head of the abutment flange assembly. Two fine slots are machined in the abutment flange head to allow any air trapped in the working chambers to escape to the replenishing chamber. Fluid flow through these slots is so small that it does not affect the operation of the damper. Air collects at a point in the replenishing chamber remote from the replenishing valves so it is not returned to the working chambers.

The thermostatic valve assembly is in a hole through the center of the lower half of the wingshaft. The assembly is held by the valve spool at the upper end, and by a packing gland at the lower end. The valve proper is at the upper end in the valve spool. It is hollow, allowing flow from a slot cut in the side of the valve to the chamber in the upper half of the wingshaft. Fluid flows through two radial holes in the wingshaft, from two diametrically opposite working chambers, to a slot in the groove in the valve spool. One of these holes is indicated on the illustration as passage B. Fluid flows out of the chamber within the wingshaft through holes to the other two working chambers.

Compensation for temperature is accomplished by the rotation of the slotted valve in relation to the slot in the valve spool, varying the effective size of the orifice. The valve is rotated by the twisting of a bi-metallic thermostatic coil pinned to both ends of the valve assembly. The upper and lower ends of the valve assembly are kept the proper distance apart by a swivel link that does not restrict rotation of the bi-metallic coil. The bi-metal is made of two layers of metal bonded together; one layer is of metal with a low coefficient of expansion and the other layer of metal with a high coefficient of expansion. Temperature change results in unequal expansion or contraction of the layers, causing the coil to twist. Thus, the orifice is smaller when the temperature is high and the fluid viscosity is low. Similarly, the orifice is enlarged when the temperature is low and the fluid viscosity is high.

By means of an adjustment slot at the lower end of the valve stem, the initial setting of the valve may be adjusted to provide varying degrees of "stiffness" in the shock absorber's action. The slot is covered by a dust cap screwed into the wingshaft. A felt seal prevents the loss of oil past the lower end of the valve assembly.

The lower end of the wingshaft rotates in the closing flange which is held from rotating by two dowel pins into the abutment flange assembly. The hollow dowel pin in passage A (leading to the replenishing chamber,) allows fluid to enter the annular chamber below the closing flange to lubricate the wingshaft seal. The wingshaft seal is under compression from the heavy packing spring, bearing on the packing spring retainer. The seal is subject to the fluid pressure in the replenishing chamber only. The three packing rings are of latex-impregnated felt, which absorbs enough fluid to lubricate the shaft. The bottom ring is of asbestos. The closing cap is screwed to the housing against the closing-flange gasket of oil-resistant synthetic rubber, insuring a tight oil-proof seal. A small hole drilled in the closing-cap and housing is filled with solder to prevent the closing-cap from unscrewing.

The shimmy damper is filled with fluid under pressure through a filler valve on the side of the unit near the top. The valve is normally covered with a dust cap, safety-wired in place. The filler valve passage leads to the replenishing chamber.

MAINTENANCE: Except for maintaining the level of the fluid, no other maintenance is permissible. Packing replacement is a factory or depot operation.

The shimmy damper controls only those movements that reach the wingshaft; therefore, make complete inspection of all fittings and connections between the shock strut and the wingshaft before dismounting the damper unit.

Correct fluid level is important for proper functioning of the damper. When fluid must be added to bring the level indicator to the proper position, insert it with a standard Zerk gun. Houdaille fluid number 1404 should be used, as its viscosity is matched with the characteristic of the thermostatic valve. In an emergency, AN-VV-O-366a fluid may be used, but it is not recommended.

Air in the working chambers may cause the unit to become too "soft" in action to perform its function. To work air out of the unit, remove the unit from the airplane and place it on its side with the filler valve up. Remove the valve and pour fluid in the hole, operating the wingshaft by hand, until fluid overflows. After the valve is replaced, bring the fluid level to the proper point with a Zerk gun.

The arrowhead (slot) indicating the position of the thermostat valve should be between the marks O (open) and S (shut) stamped on the end of the wingshaft. Moving the arrowhead mark clockwise toward S increases the damper "stiffness"; moving the mark counter-clockwise toward O "softens" its action. Taxiing tests should be made between each adjustment. Adjustment of the valve stem should never exceed 1/32 inch at one time, as the adjustment is extremely sensitive.

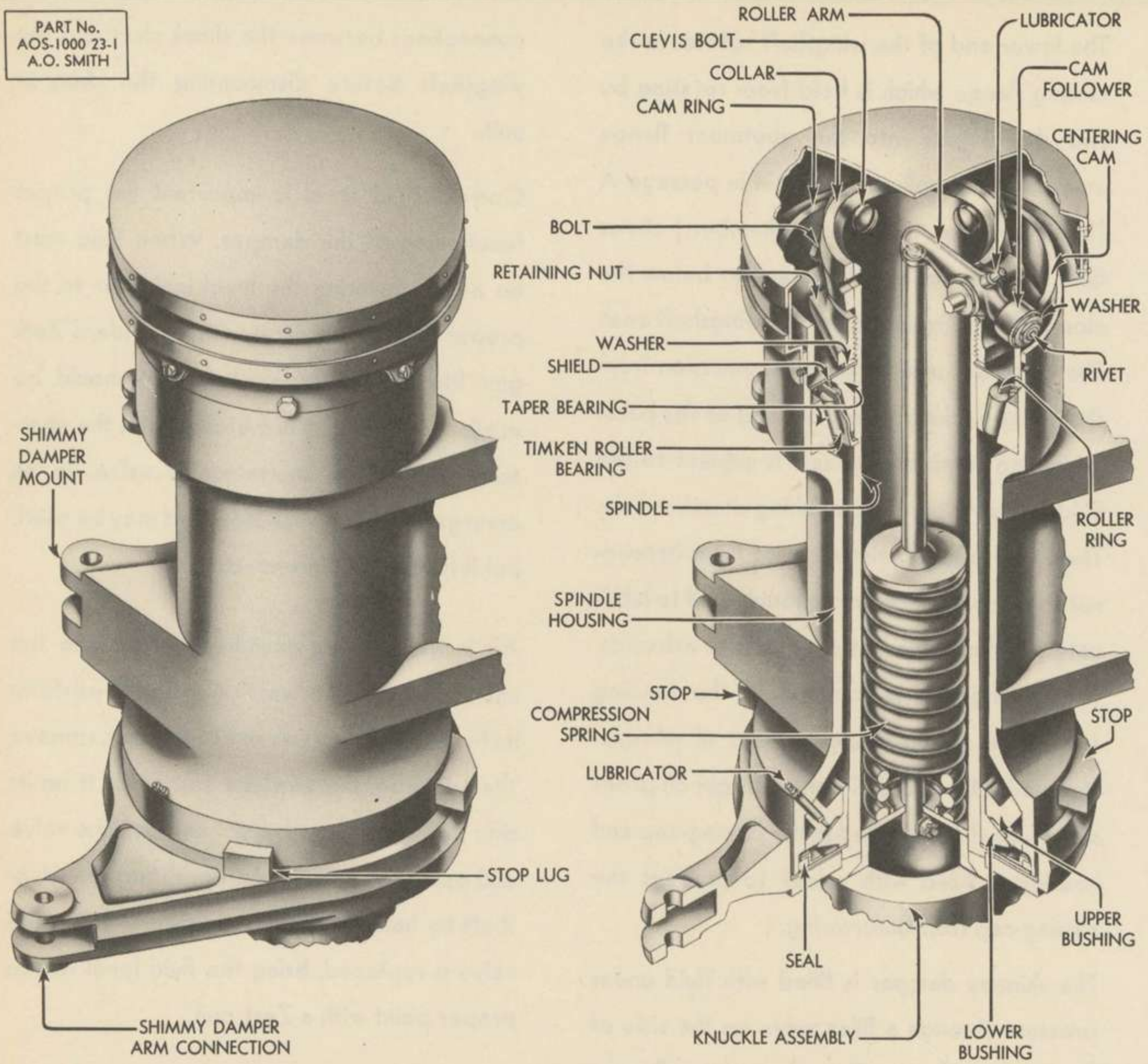

NOSE GEAR SPINDLE AND SELF CENTERING MECHANISM

PURPOSE: To center the nose wheels in the proper position to retract them into the nose wheel well.

LOCATION: In the knuckle assembly of the nose gear.

OPERATION: Wheels must be centered straight ahead when they leave the ground so they will be parallel with the nose wheel well beams before the gear is retracted; otherwise, the nose wheels may not fit into the well.

When the wheels are not contacting the ground, the self-centering mechanism centers them from positions within 15 degrees either side of center. Centering is accomplished by a spring-loaded rocker arm with a needle bearing roller, bearing on a cam secured to the spindle housing of the knuckle assembly. The cam has a depression into which the roller is forced by a heavy coil compression spring and push rod acting against the inner end of the rocker arm. When the roller is at the bottom of the cam depression, the wheels are lined up fore and aft. When the roller is on the level part of the cam, no centering action takes place. However, the nose gear will be within the 15 degree limitation at take off. The centering mechanism does not adversely affect steering.

The rocker arm is hinged in a needle bearing to a collar bolted to the upper end of the spindle. The bearing is lubricated through a lubricator fitting. To avoid damaging the shimmy damper, stops on the spindle housing limit the spindle rotation to 68 degrees either side of center. The spindle is mounted in two bearings. The upper bearing is a tapered roller bearing which takes radial loads and the vertical "hanging" load of the spindle when the gear is off the ground. The lower bearing is plain and tapered. The bronze lower bushing is secured to the spindle and bears against the steel upper bushing of the knuckle forging. A lubricator fitting permits the introduction of high melting point grease into a grease groove in the steel bushing. The lower bearing takes the ground contact loads and radial loads.

MAINTENANCE: Lubrication of the rocker arm and spindle bearings at the proper intervals is the only maintenance required.

When it becomes necessary to remove the spindle from the spindle housing, a special tool is required to compress the spring so that the collar and rocker arm can be removed.

TAIL SKID

PURPOSE: To provide a rear ground contact point to protect the lower rear turret during landings and take-offs.

LOCATION: At the bottom of the body between stations 1039 and 1076.

OPERATION: Recommended flying techniques call for lowering the tail of the airplane when take-off speed is attained, and landing in a three-point attitude with the tail skid not quite touching the runway. Occasionally, the tail skid will accidently touch during these maneuvers. It is designed for a maximum vertical load of 26,000 pounds.

During normal operation, the tail skid is extended and retracted at the same time as the main and nose wheels. No provisions are made for emergency operation of the tail skid. When the skid is retracted flush with the body, no portion extends into the air stream. When the skid is extended, a canvas cover prevents dirt and dust from entering the body.

The tail skid assembly consists of tail skid drag tubes, a fairing, a contact shoe, a shock strut, and an actuator screw and motor assembly.

The tail skid shoe is made of a special, hardened steel. It is secured to a steel bracket by six bolts and may be replaced when worn. The bracket is welded to two steel tubes, hinged in plain bronze bearings at their forward ends to fittings at station 1039. A sheet metal fairing is secured to these tubes to fair the tail skid to the body contours when the tail skid is retracted.

The forked yoke is hinged at its lower end to the tail shoe bracket. The two legs of the yoke straddle the shock strut and fit around bearing pins on the trunnion collar. The trunnion collar is welded to the upper end of the shock strut cylinder. This arrangement allows the strut cylinder to swing forward and up between the legs of the yoke when the tail skid is retracted. All of the above mentioned bearings are plain bronze and are lubricated through lubricator fittings.

The shock strut absorbs the shock of ground contact by employing an air-oil design similar (although inverted and much smaller) in construction and operation to the main landing gear units.

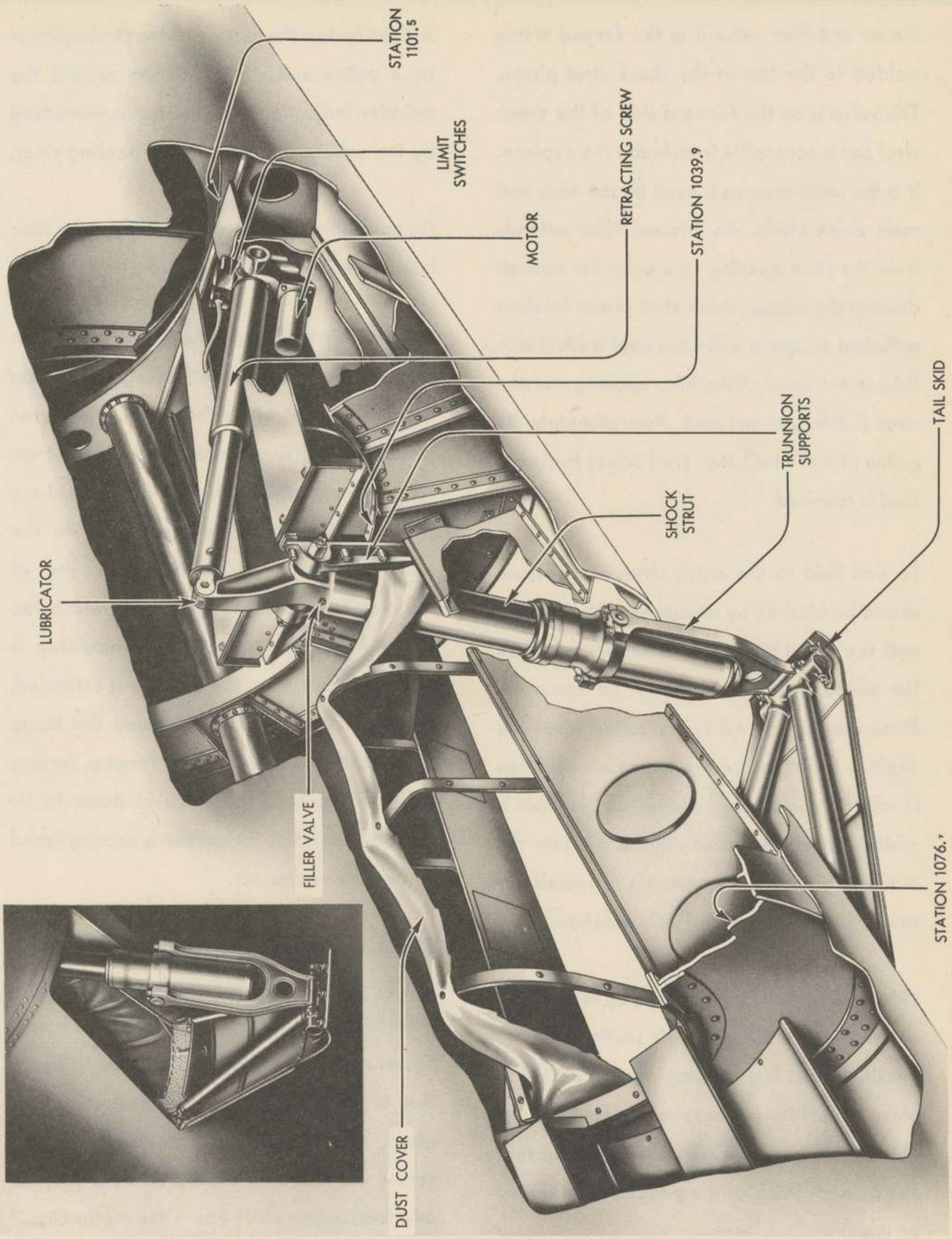

TAIL SKID RETRACTING MECHANISM

An air and filler valve is in the forged fitting welded to the top of the shock strut piston. This valve is on the forward side of the shock strut and is accessible from inside the airplane. It is the same type as is used on the nose and main shock struts. An internal tube extends from the filler opening to a point far enough down in the tubular shock strut piston to allow sufficient air space when the strut is filled with fluid to the level of the filler opening and the strut is fully compressed. Approximately .83 gallon of AN-VV-O-366a (red color) hydraulic fluid is required.

To add fluid to the shock strut, air pressure should be bled off by unscrewing the air valve until the radial bleed hole is uncovered. Then the entire valve body should be removed. Since the tail skid will be extended when the airplane is on the ground, the shock strut can readily be compressed manually. After fluid is added, replace the filler valve and inflate the strut with air until the pressure is 75 pounds per square inch with the strut fully extended.

Oil and air leakage is prevented by two leather and three synthetic rubber V section chevron packing rings. The packing rings are held in place around the piston tube by adapter rings. The two leather rings are installed at the top. The point of the V of the packing rings should be up.

Installation of this combination of packing rings is identified on the outside of the strut cylinder by a yellow and a green stripe around the cylinder, indicating that the strut is winterized by the addition of the leather packing rings.

Do not tighten the packing nut any more than is necessary to prevent leakage.

A forging is welded to the top of the piston tube. At the lower end of the forging is a plain bearing through which the shock strut piston is secured to fittings bolted to the body structure. Ground contact loads of the tail skid are transmitted through the shock strut to the body at this point. At the upper end of the forging is another bearing to which the forward end of the actuator mechanism is attached. Thus, when the actuator is extended, the shock strut is rotated around the hinge point at the lower end of the forging, forcing the yoke to push the tail skid down to its extended position. Retraction is accomplished in the reverse manner.

The tail skid actuator is a self-contained, electrically-driven screw mechanism, powered by a 24-volt direct current, reversible, 1/6 horsepower motor. The motor has a magnetic brake that is disengaged when the motor is energized, thus preventing "creeping" of the screw. The motor is protected by a thermal overload switch which opens the motor circuit if the current flow exceeds the rating of the motor.

High motor speed is reduced by a triple spur gear so set to drive the screw shaft at 1/104th of the motor speed. The screw has four Acme threads per inch and has positive, non-jamming stops at each end with neoprene bumpers enclosed in steel cups. The bumpers absorb the shock of contact with the bronze nut and load the threads of the nut and screw when the bumpers are depressed to prevent "creeping."

The nut is screwed into a steel retainer which, in turn, is bolted to the inside of the nut-tube which has a forked terminal screwed and bolted to its forward end. This terminal is fastened to the forged arm welded to the shock strut piston tube. To allow minor adjustment of the limit switch, the bolt through the terminal and the nut-tube can be removed and the terminal turned in the nut-tube. The nut-tube is supported in a felt bushing by a tube secured to the motor and gear box end of the unit. The support tube also acts as a dust cover.

For opening the motor circuit at the limits of travel, limit switches are mounted in a housing attached to the gear box. Limit switch cams are driven by a worm and spur gear having a high reduction ratio. There is a cam for each of the two limit switches, accessible by removing a cover on the limit switch housing. Each cam can be adjusted through a range amounting to 50 percent of the screw travel.

The nose, main, and tail skid control circuits are energized simultaneously through the landing gear switch on the pilot's aisle stand. One tail skid limit switch is in the EXTEND circuit and the other is in the RETRACT circuit from the landing gear switch to the corresponding solenoid switches. Solenoid switches are located in a shield adjacent to the tail skid actuator. When these switches are energized, they close the respective motor circuit to the power bus in the tail skid junction shield.

The gear box end of the unit is supported by 1¼ inch diameter pins, so as to be free to swing in a plane vertical to the body structure. The screw mechanism extends approximately 7 inches from the fully retracted position.

LIMIT SWITCH ADJUSTMENT: Adjust the DOWN limit switch so that the circuit breaks ¼ turn of the screw before the stops contact when the tail skid is extended. Adjust the terminal on the actuator nut-tube so that the hinge point at the bottom of the yoke, the hinge point at the top of the yoke, and the hinge point at the top of the shock strut piston tube are within ¼ inch of being in a straight line.

Adjust the UP limit switch so that the circuit breaks at such a point that the subsequent "coast" will bring the tail skid fairing within ¼ inch of being flush with the body. When the tail skid is retracted the stops need not contact but the circuit must be broken not less than ¼ turn of the screw before the stops contact.

LIMIT SWITCHES

PURPOSE: Limit switches provided in the landing gear motor control circuits open the motor circuits at the correct point for proper operation of the retraction mechanisms.

LOCATION: Limit switches for the main and nose gear motors are contained in shields mounted on the dust covers of the corresponding retracting screws. For both main and nose gears, the shield at the forward end of the retracting screw assembly contains the DOWN limit switch. Limit switches for the nacelle door motors are contained in a shield mounted on the door retracting screw gear boxes. Limit switches for the tail skid motor are contained in the shield mounted on top of the gear housing.

OPERATION: Two types of snap-action switches are used. One type is a single-pole, single-throw, normally closed switch. While the pin is depressed, the switch contacts are open. The other type is a single-pole, double-throw switch with no off position. Contact is maintained from the common terminal to the C terminal until the operating pin is pushed. While the pin is depressed, the circuit through C terminal is open, and contact is made from the common terminal to the O terminal.

A double-throw switch may be substituted for a single-throw switch by connecting to only the common terminal and the C terminal.

There are two switches in the main gear UP limit shield and three in the DOWN limit shield. Both nose gear limit shields contain three switches, operated at the same time by a single hinged arm mounted in the shield. The hinged arm carries a roller which extends through a slot in the bottom of the shield and the mating surface of the dust cover. The hinged arm is lifted to depress the switch operating pins when the roller rides upon a lug welded to the end of the retracting screw nut-tube. The position of the roller in each switch shield with respect to the corresponding lug may be shifted by an adjusting screw in one end of the shield. Turning the adjusting screw IN (clockwise) results in more travel of the retracting screw before the motor is stopped.

The microswitches are mounted on separate supports in the shield. One end of the support is held by a spring and adjusting screw which allows individual adjustment for synchronizing the switch action.

ADJUSTMENT: To set the limit switches, the airplane must be supported on jacks. Remove the large plug connector from the limit switch to be checked. (See illustrations.) For instance, when checking the UP limit of the main gear, wires number MD-15 and MD-16 lead to pins H and I; therefore, the meter should be connected to H and I. One of the retracting motors must be removed (preferably the emergency motor), and a special wrench or a piece of flat stock that fits the keyways in the tube used to turn the retracting mechanism. The main gear UP limit switch should be set to open ½ turn of the motor output drive shaft before the stop is engaged. The main gear DOWN limit should be set to open 3/4 turn before the stop is engaged. Both UP and DOWN limit switches of the nose gear should be set to open ½ turn before the stops are engaged.

Each of the nacelle door limit switch shields contains two switches operated by two cams driven from the retracting screw gear box. The switches should be set to open 2 2/3 turns of the retracting screw before the stops engage when the doors open. For closing, the setting may vary slightly to insure that the doors close snugly but do not jam.

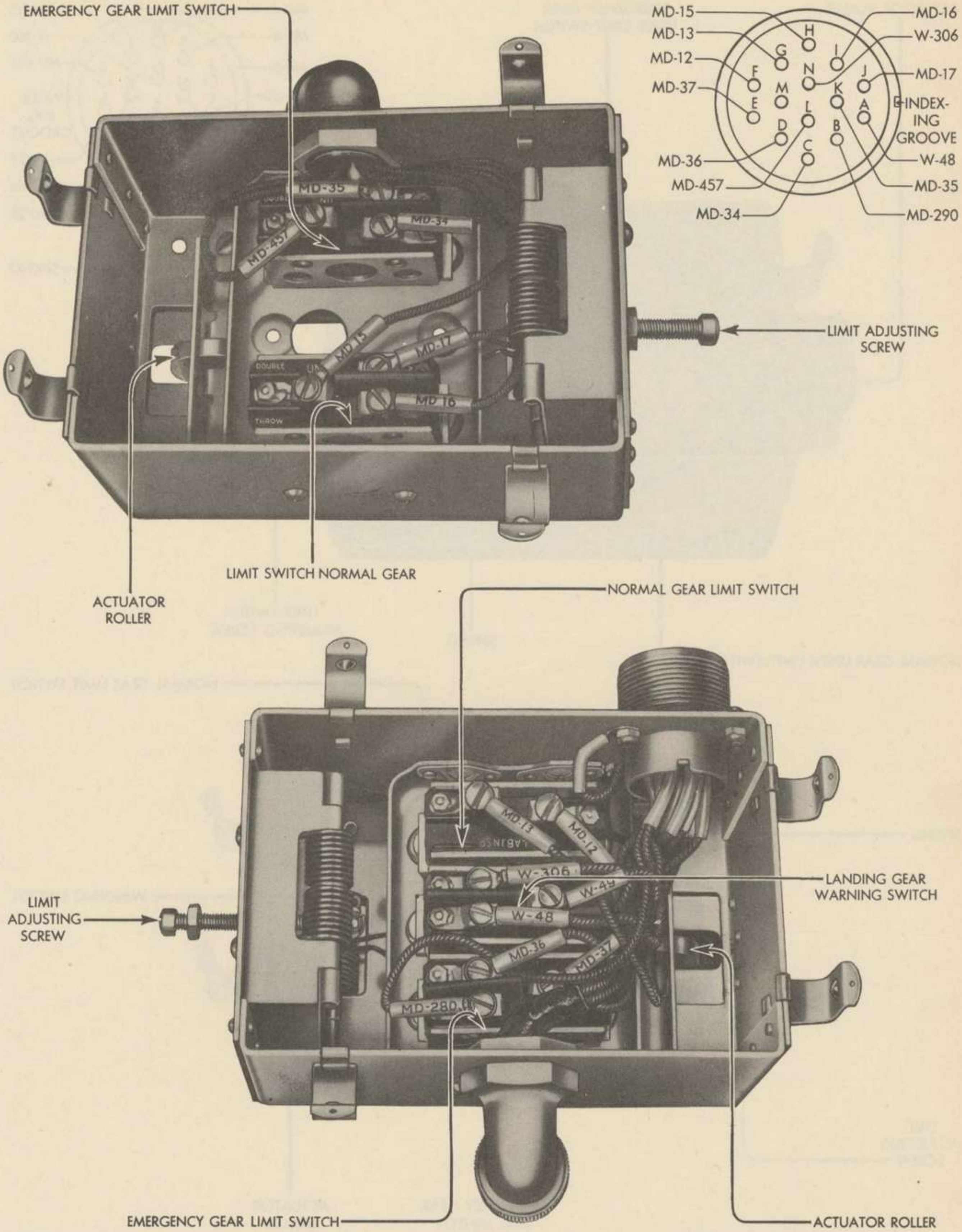

MAIN GEAR LIMIT SWITCHES

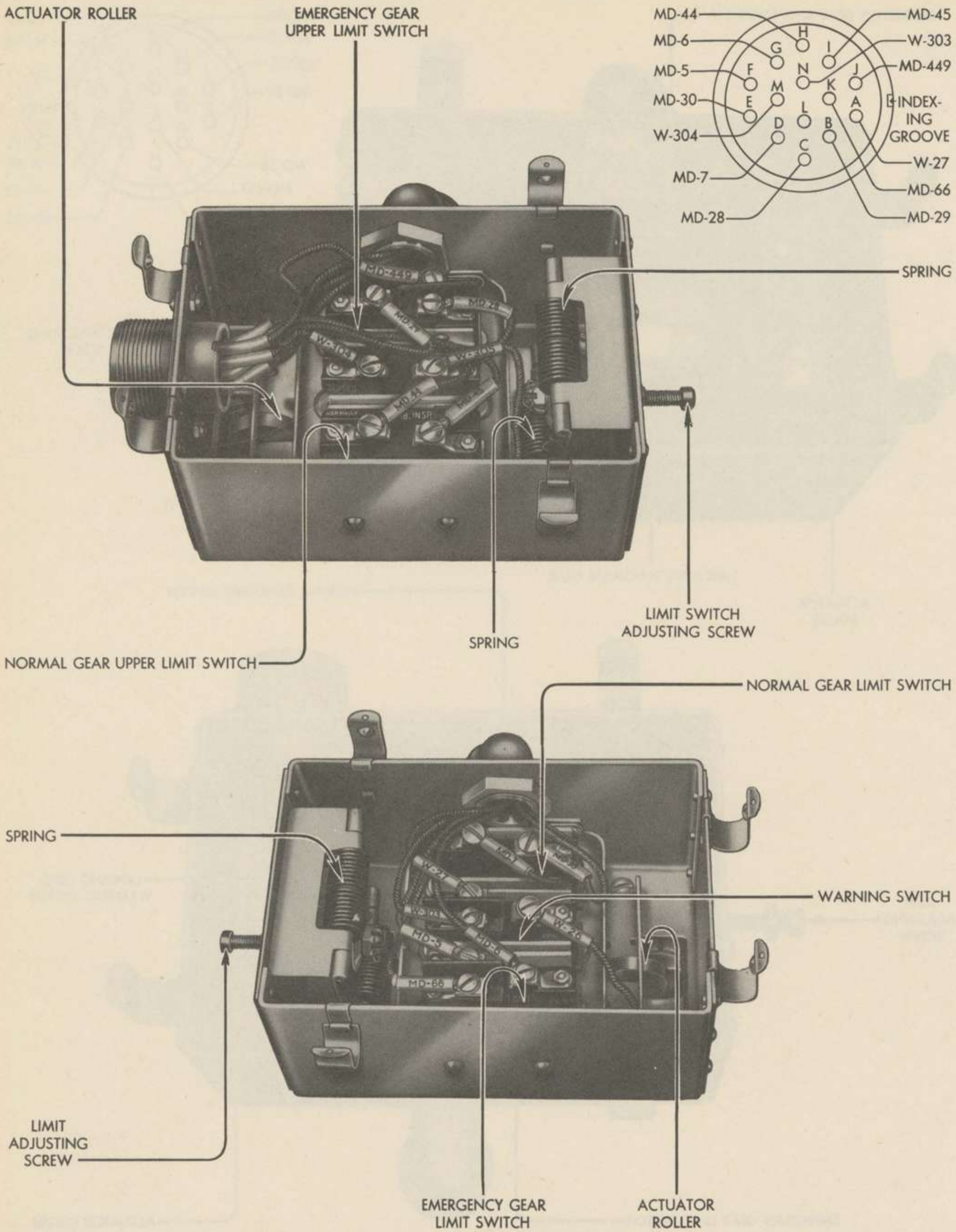

NOSE GEAR LIMIT SWITCHES

LANDING GEAR WIRING DIAGRAM

GENERAL DESCRIPTION: The landing gear motors are connected to the power distribution buses by solenoid switches in shields near the motors. As all of the landing gear motors are reversible (split-field type), two solenoid switches are required for each motor. The limit and transfer switches are placed in the control circuits from the normal landing gear switch on the pilot's aisle stand, or, in the case of the emergency system, from the circuit of the emergency landing gear switch at the aft end of the pilot's control stand. (See LIMIT SWITCHES.)

Only four of the nine landing gear motors are fused. The nose gear normal motor has a 100-ampere fuse in its solenoid shield on the right nose wheel well beam. The nacelle door motors are similarly fused, with a 100-ampere fuse each, on the respective inboard nacelle solenoid panels (nacelle upper fairing). The tail skid motor receives power through its solenoid switches and a 20-ampere fuse, located in the tail skid junction shield. This shield is located near the floor and to the right of the tail skid motor.

No fuses are provided for the other five motors. These are the normal and emergency main landing gear motors and the nose gear emergency motor.

Power to energize the landing gear solenoid switches is fed through a 10-ampere fuse in the fuse shield on the right side of the pilot's aisle stand. The fuse is marked LANDING GEAR. From this fuse, control current goes first to the common terminal of the landing gear power transfer switch on the aft end of the pilot's control stand. When this switch is in the NORMAL position the control current continues to the common terminal of the landing gear switch on the aisle stand. This double-throw switch is protected from accidental operation by a guard hinged at its forward end. A hole in the top of the guard fits over the toggle switch, holding it in the OFF position when the guard is locked. As further protection against accidental retraction of the landing gear, a safety catch must be turned aside before the switch can be flipped to the UP position.

NORMAL OPERATION: When the landing gear is to be retracted, the landing gear switch is flipped to the UP position to simultaneously energize the UP solenoids of the normal retracting motors. As each gear starts up, its green signal light goes out and the red warning lamp lights. (See WARNING CIRCUIT.) These lights are on the co-pilot's instrument panel. As each gear unit is fully retracted, its UP limit switch opens its control circuit, stopping the motor. When the main gear normal UP limit switches are depressed, the main gear motors stop and the control current is transferred to the corresponding nacelle door motor solenoid switch, closing the doors. When the doors are fully closed, the door UP limit switch is opened, stopping the motor. When the nose gear is retracted and both sets of nacelle doors are closed, the red warning light on the co-pilot's panel goes out. The landing gear switch may be then returned to the OFF position and the guard is snapped into place.

When the landing gear is to be extended, the landing gear switch is flipped to the DOWN position, simultaneously energizing the DOWN solenoids of the nose gear normal motor, the tail skid motor, and the nacelle door motors. As the gear starts to extend, the red warning light is again lit. When the nacelle door DOWN limit switches are engaged, the control current is transferred to the DOWN solenoid switches of the main gear normal motors, stopping the door motors and energizing the main gear motors. When the main gear is fully extended, the DOWN limit switches open the control circuits to the main gear motor solenoids. The three green signal lights are illumined and the red warning light is out, the landing gear switch may then be returned to the OFF position, indicating that the landing gear is fully extended.

EMERGENCY OPERATION: If normal system power is available, the emergency landing gear motors may be used to extend the landing gear. To do this, the pilot applies normal power to the emergency power buses by flipping his power transfer switch to the EMERGENCY position. This energizes the power transfer solenoid switch in the aft bomb door solenoid shield, connecting the normal power distribution bus to the emergency power distribution buses. The pilot may then pull the emergency nacelle door release handle.

If normal power is not available, he should order the EMERGENCY switch in the battery solenoid shield to be placed in the EMERGENCY position. When this switch is in the EMERGENCY position, the power from the auxiliary power plant (which should be operating prior to any landing) and from the battery is isolated from the normal bus system and applied to the emergency bus system.

When the pilot pulls the emergency nacelle door release control handle, the doors are released from their actuators and the final travel of the handle holds the emergency landing gear switch in the DOWN position. (See EMERGENCY NACELLE DOOR RELEASE SYSTEM). The emergency buses furnish power to the common terminal of this double-throw, momentary contact switch. When contact is made to its DOWN pole, the control current flows to the common terminal of the emergency limit and transfer switch in the DOWN limit switch shield of the nose gear. If the nose gear is retracted, contact is made at pole C, which is in contact when the switch button is not depressed, and the control current flows to the DOWN solenoid of the nose gear emergency motor. When the nose gear is fully extended, the switch snaps from C to O, transferring this control current from the DOWN solenoid of the nose gear emergency motor to the common terminal of the DOWN emergency limit and transfer switch of the left main gear. When the left main gear is extended, the control current is transferred from terminal C (left gear motor solenoid) to terminal O to extend the right main gear in the same manner.

Retraction of the landing gear units by the emergency motors is accomplished by holding down the emergency landing gear switch. Again originating with the nose gear, the operation sequence follows similarly as for extension.

WARNING: Sufficient time should always be allowed for the motors to stop before attempting to reverse their direction of rotation. Such practices as flipping the landing gear switch from UP to DOWN without pause causes damage to the motors and solenoid switches.

NOTES

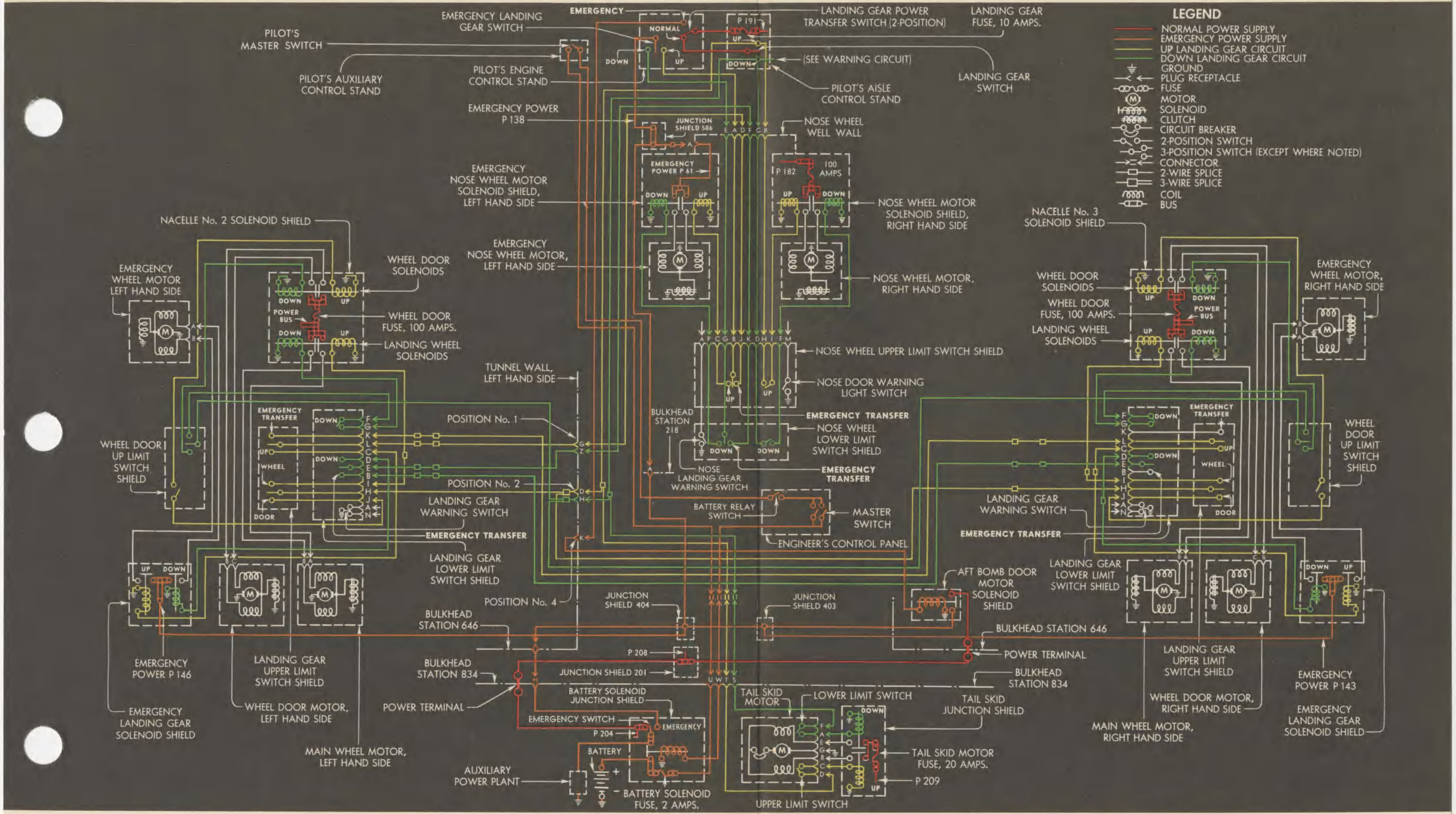

NORMAL AND EMERGENCY LANDING GEAR CIRCUIT

NOTES

OXYGEN
SYSTEM

B-29 AIRPLANE

OXYGEN SYSTEM

TABLE OF CONTENTS

OXYGEN SYSTEM

PURPOSE: To provide breathing oxygen for flight personnel when cabin pressure is less than that corresponding to an altitude of 10,000 feet.

GENERAL DESCRIPTION: The system is of the low pressure demand type which provides oxygen only during the time of inhaling and also meters the proper oxygen-to-air ratio required at various altitudes. The normal system pressure is comparatively low, varying from 400 to 450 pounds per square inch. Absolute maximum pressure is 500 pounds per square inch. In normal long range operation, the crew must breathe oxygen when the cabin pressure is less than that of 10,000 feet altitude. When the cabin is pressurized, this pressure altitude of 10,000 feet is reached when the airplane attains an altitude of approximately 33,000 feet. At an altitude of 40,000 feet, the effective cabin altitude will be above 12,500 feet.

Before entering combat areas at high altitude, the cabin pressure must be either partly or entirely released. Complete release avoids the possibility of sudden decompression due to perforation of the pressurized cabin by gunfire. Sudden decompression is extremely dangerous to the crew, equipment and the airplane structure. In extreme cases, it may cause crew members to suffer from aeroembolism; also the escaping air may tear equipment loose and carry it through the break. If the break is large enough, the sudden escape of pressure air may result in negative internal pressure, much greater than that for which the cabin-structure is designed. Under these conditions, failure of the cabin structure may occur.

When combat is anticipated, progressive manual release of the cabin pressure should begin thirty minutes before entering the combat area. Crew members should begin breathing oxygen as soon as release of pressure is started.

After combat, if no further action is expected, the cabin may be pressurized again by closing the engineer's pressure relief valve. If there are many leaks in the pressure compartments, it may not be possible for the cabin compressors to maintain pressure adequate to permit flight without use of oxygen. In this case, the individual use of oxygen must be continued or the airplane must descend to a lower altitude. The duration of high altitude flight with low cabin pressure is limited since at an altitude of 35,000 feet, a crew of twelve will exhaust the oxygen supply in about six hours.

NOTES

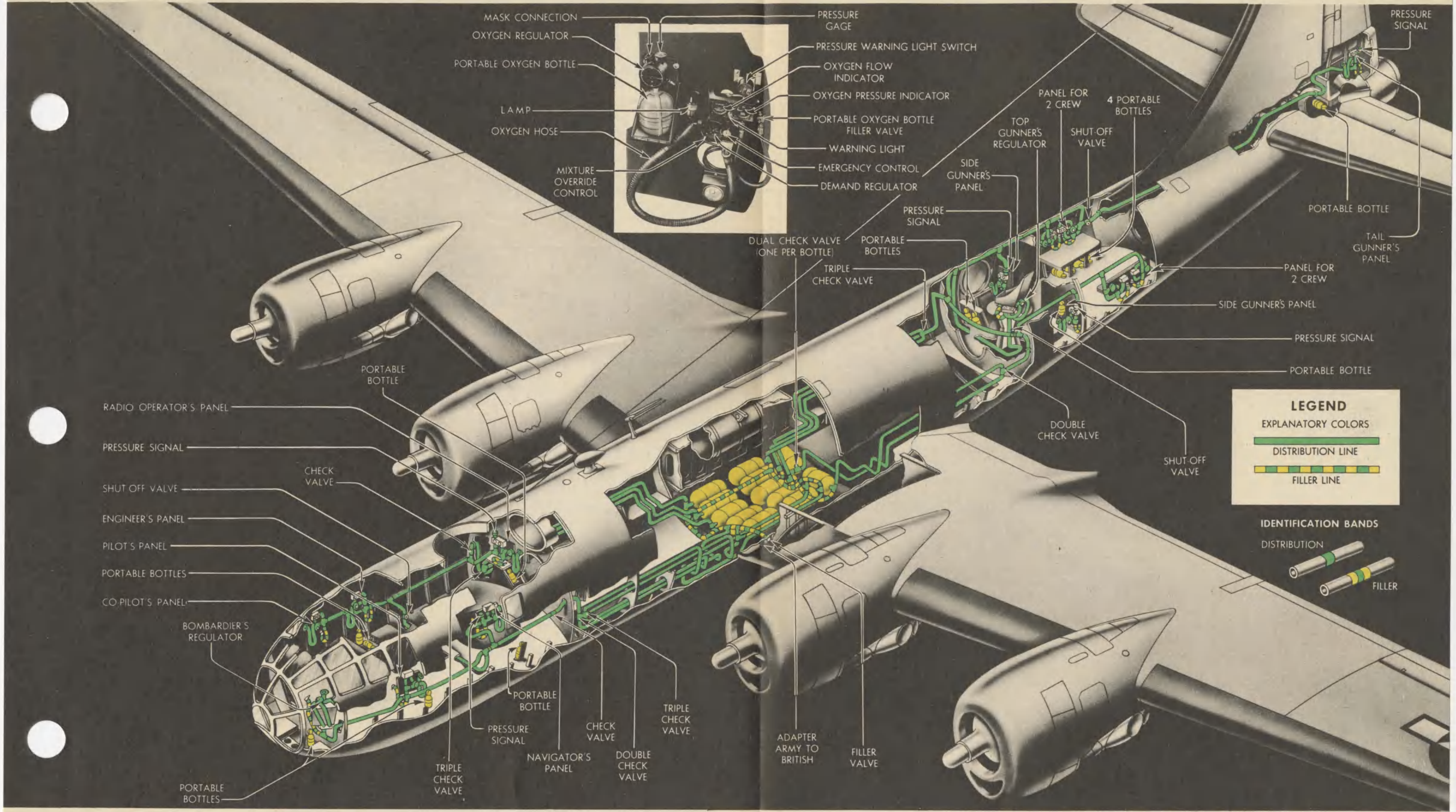

OXYGEN SYSTEM

NOTES

OXYGEN SYSTEM (Continued)

The demand system is the more economical system for long range, high altitude airplanes. It has longer duration than a constant flow system with the same amount of oxygen because in the demand system, oxygen is supplied only as required by the user. The demand system mask is less bulky and more comfortable to wear than masks used in the constant flow system, and it is less likely to become damaged by catching on equipment. However, unlike the constant flow system, the mask must fit perfectly since the air-to-oxygen mixture is closely regulated. Leaks in the mask, due either to defects or improper fit, can be fatal at high altitudes. Each crew member must have his own personal mask fitted by the oxygen officer.

The oxygen system is fed by a group of twelve low pressure type G-1 cylinders carried in the wing center section between the bomb bays. Each of these cylinders has a maximum pressure of 500 pounds per square inch, and a capacity of 2100 cubic inches. The twelve centrally located cylinders are divided into two groups; a group of seven cylinders serves the foward pressurized compartment and the tail gunner's compartment. Each group is divided into a pair of interconnected sub systems. The left hand sub system for the forward pressurized compartment, supplied by four cylinders, provides oxygen for the bombardier, pilot and navigator. The right hand sub system, supplied by three cylinders, provides oxygen for the co-pilot, engineer and radio operator. The left hand sub system for the aft pressurized compartment, supplied by two cylinders, serves the left hand sighting station and the two relief crew stations. The right hand sub system, supplied by three cylinders, serves the upper gun sighting station, the right hand side sighting station, the two relief crew stations and the tail gunner's compartment.

In later airplanes, two additional type G-1 cylinders, connected to the recharging line, are added in the unpressurized tail section to serve the tail gunner's compartment.

Normally, these sub systems operate independently, each serving one side of the airplane in each section. However, in an emergency, the forward sub systems and the aft sub systems may be interconnected so that they become two systems served by the oxygen cylinders. This is done by lines in the pressurized compartments connecting the right hand and left hand sub systems. In normal operation, the shut-off valves connecting the systems are in the closed position.

The forward shut-off valve is located on the inboard side of the engineer's stand, convenient to the engineer's right hand. The rear shut-off valve is located to the left of and above the forward door to the aft pressurized compartment. A similar shut-off valve to cut off the oxygen supply to the tail gunner's compartment is located on the right hand side of the aft pressurized compartment near the rear end of the lower berth. Unlike the other two shut-off valves, this valve must be open when the tail gunner requires oxygen and is closed only when the tail gunner is out of action and his oxygen supply is required for other crew members, or when this line is broken and oxygen is escaping from the system.

Each oxygen cylinder is fitted with a dual check valve which allows the cylinder to be filled through the normal filler line but prevents reverse flow from the cylinder into the filler lines. It also allows flow from the cylinders into the main system lines but does not permit reverse flow from the system back into the cylinders. Due to this feature, one or more cylinders may be removed or damaged without losing the supply from the other cylinders in the same group. The three right hand forward sub system cylinders are manifolded by a triple check valve which permits only forward flow from the cylinders in the main supply line. This valve, located aft of the forward pressure bulkhead, is connected to a single line passing through the bulkhead and to the stations. The valve is served with individual lines running to it from each cylinder. If a supply line is severed, the valve prevents flow from the system into the severed line and thus prevents the loss of oxygen except from the cylinder or line which has been damaged.

A single check valve in the main supply line forward of the pressure bulkhead permits only forward flow of the oxygen and prevents oxygen loss if the line between the single and triple check valves is severed. This loss would otherwise occur when a sub system is being cross-fed from a companion sub system through the shut-off valve.

In the left hand forward sub system, three of the cylinders are manifolded through a triple check valve, also located aft of the forward pressure bulkhead, and the remaining cylinder is connected to the main lines through a double check valve. These valves serve the same purpose as those in the right hand system. The left hand system also has a single check valve forward of the pressure bulkhead to prevent back flow in case the line is severed. The left hand aft system uses the same arrangement, but since it has only two cylinders, a double check valve ties the cylinders together. The right hand aft system is the same as the right hand forward system except for the number of stations served. Neither of the aft systems have single check valves between the multiple check valves and the oxygen panels.

All the oxygen cylinders in the main system are filled through a single external valve underneath the wing, on the left hand side of the fuselage between the bomb bays. A single line from the filler valve connects to each oxygen cylinder. THE SYSTEM CANNOT BE FILLED THROUGH ANY OTHER VALVE IN THE AIRPLANE.

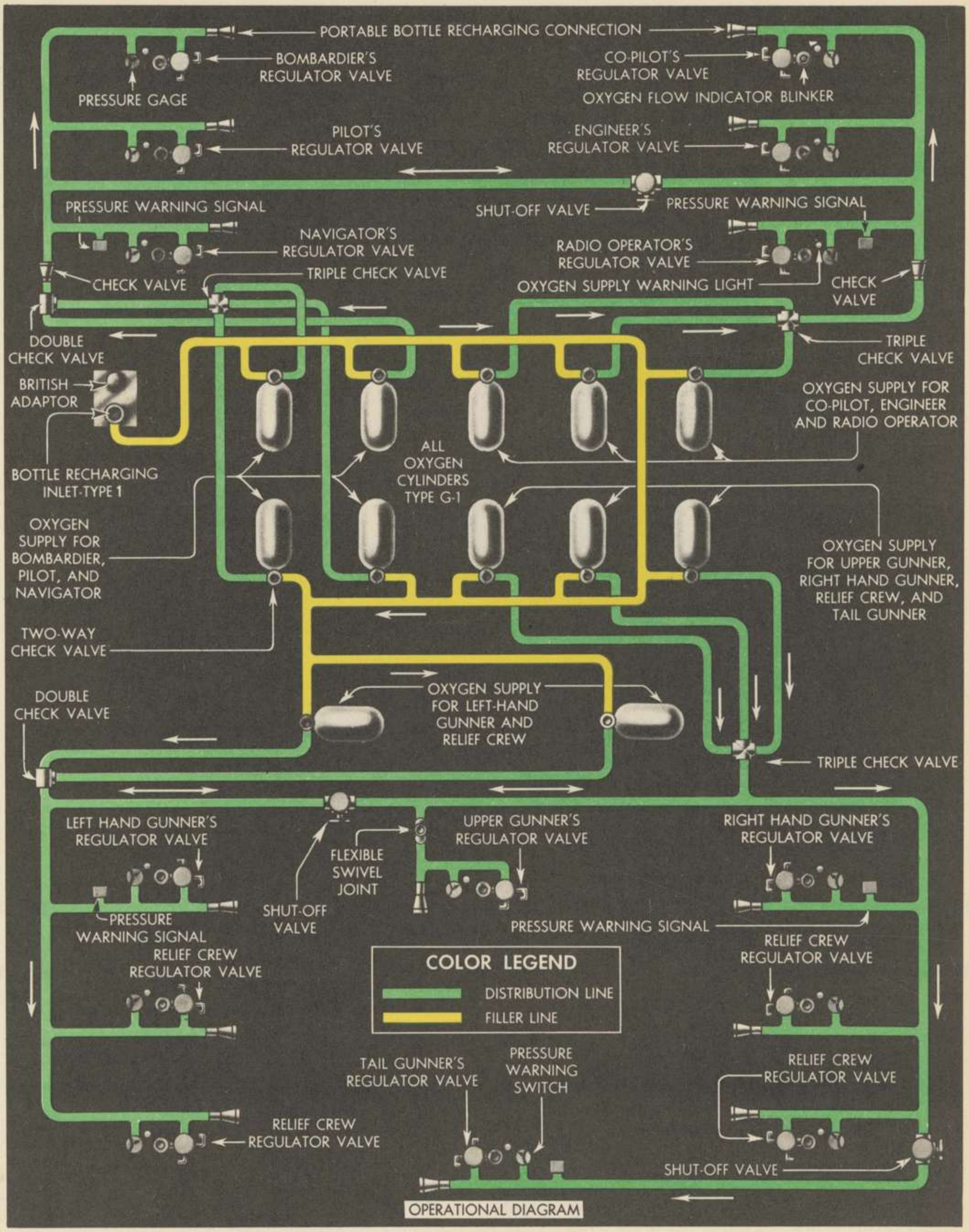

OXYGEN SYSTEM

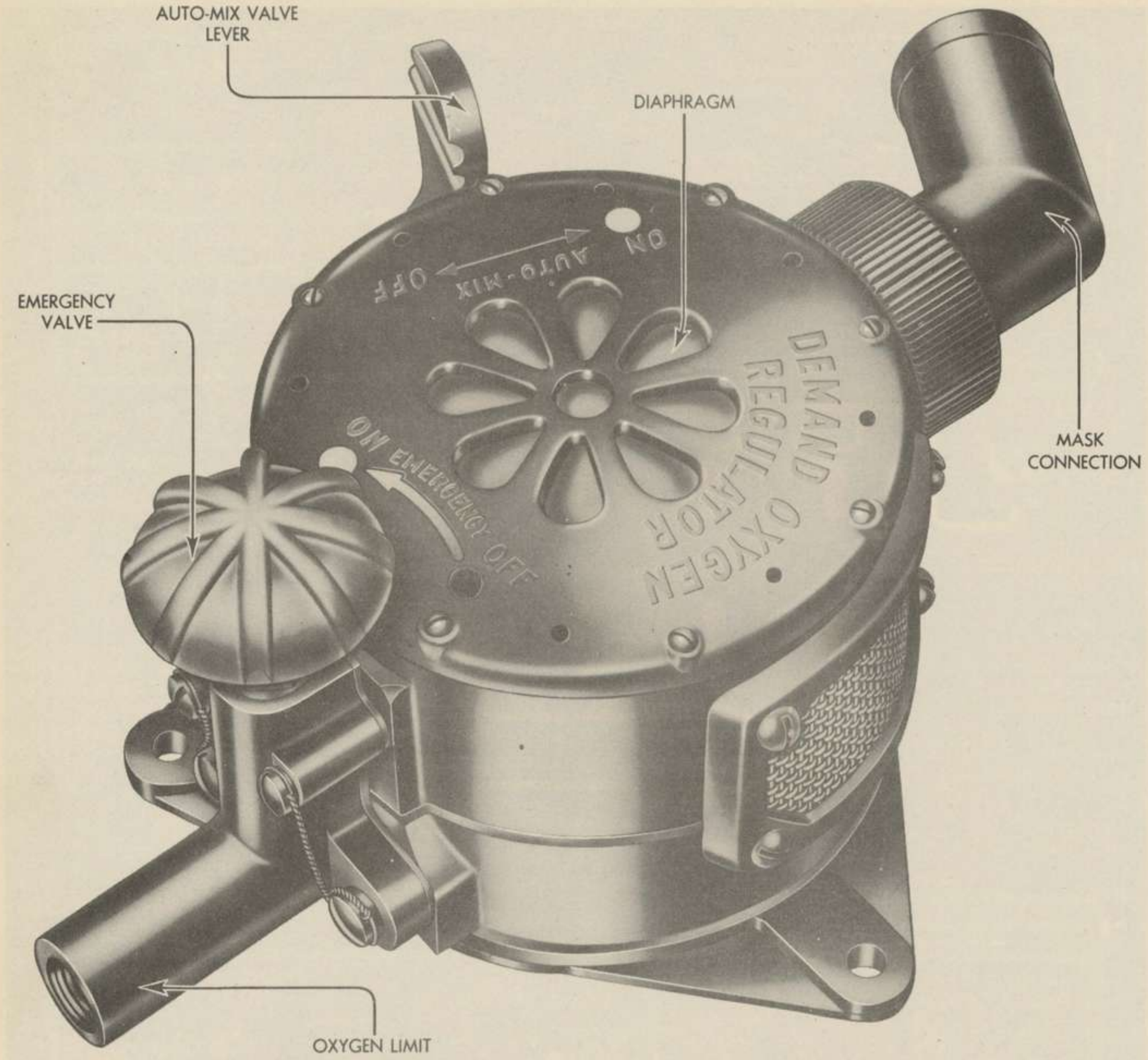

A-12 OXYGEN DEMAND REGULATOR

PURPOSE: To provide the user with oxygen upon inhalation only and in the proper mixture in relation to the altitude.

LOCATION: A total of fourteen demand regulators are used, one at each crew station oxygen outlet.

OPERATION: The supply cylinder working pressure varies from 100 to 450 pounds per square inch. The oxygen demand regulator first reduces the pressure of the oxygen to between 30 and 40 pounds per square inch. It then dilutes this oxygen with the cabin air drawn into the regulator to provide the proper breathing mixture for the existing cabin pressure altitude.

Oxygen enters the pressure reducing chamber in the first step of its passage through the regulator. The amount of oxygen taken into this chamber is controlled by a pressure sensitive bellows in the chamber which opens and closes the inlet valve as chamber pressure increases and decreases.

The oxygen flow from the pressure reducing chamber is controlled by a diaphragm controlled outlet valve. Movement of the diaphragm is accomplished by the breathing of the user. As the user inhales, the diaphragm is drawn in, opening the valve and permitting the oxygen to enter from the pressure reducing chamber into a storage chamber. The amount of oxygen leaving this storage chamber is regulated by a bellows which is sensitive to cabin pressure (altitude).

At sea level, the altitude sensitive bellows moves a double-headed valve to close the outlet from the storage chamber and open the mixing chamber directly to cabin air. Under this condition, cabin air is furnished to the user with no addition from the airplane's oxygen supply.

As cabin altitude increases, the outlet valve from the second storage chamber opens, permitting oxygen to flow into the mixing chamber. As the flow of oxygen into this chamber increases, the amount of cabin air taken into the same chamber decreases, due to the action of the altitude controlled (double-headed) mixing valve.

At cabin altitudes over 30,000 feet, the cabin air intake valve is completely closed. At the same time, the oxygen outlet valve from the second supply chamber is completely open, providing the user with pure oxygen.

In the description of the normal functioning of the demand regulator, it is assumed that the auto-mix valve lever is in the ON position. When the auto-mix valve lever is in the OFF position, the regulator still provides oxygen upon demand from the user. However, in the OFF position, the air inlet to the mixing valve is closed and, therefore, regardless of altitude, since no air dilutes the oxygen, only pure oxygen is furnished at each inhalation. The OFF position of the auto-mix valve must be used only in the following cases:

1. When pure oxygen is required from the ground up in anticipation of long flights with cabin pressure altitudes above 20,000 feet.
2. For the treatment of wounded men in cabin pressure altitudes below 30,000 feet.
3. For combat flights at night.
4. When 100% oxygen is required for the treatment of shock, loss of blood, or when flying through a poison gas area.

Use the OFF position of the auto-mix valve with the utmost caution. Since the close fit of the demand type mask prevents the entrance of air into the system and, in the OFF position, the auto-mix valve also shuts off the cabin air entering the system, if a line clogs or the oxygen supply fails, the user may suffocate.

The emergency valve is controlled by turning a red knob near the face of the regulator. Opening the valve allows a constant flow of oxygen to by-pass the regulating valves and flow directly into the mixing chamber and then into the mask. The emergency valve must be used only in the following cases:

1. To revive a crew member.
2. In cases of excessive mask leakage.
3. When it is necessary to remove the mask temporarily to vomit, spit, etc. The mask should be loosened on one side and held as close as possible to the nose.
4. If the demand regulator mechanism fails.

The use of the emergency valve rapidly exhausts the airplane's main oxygen supply. It should be used only in actual emergencies and then only as long as is absolutely necessary.

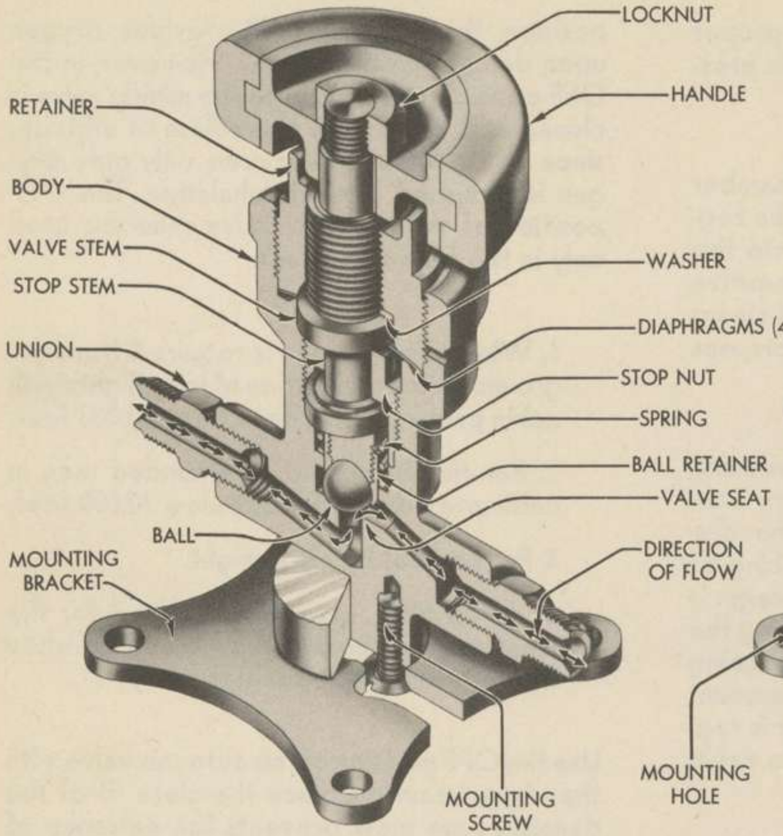

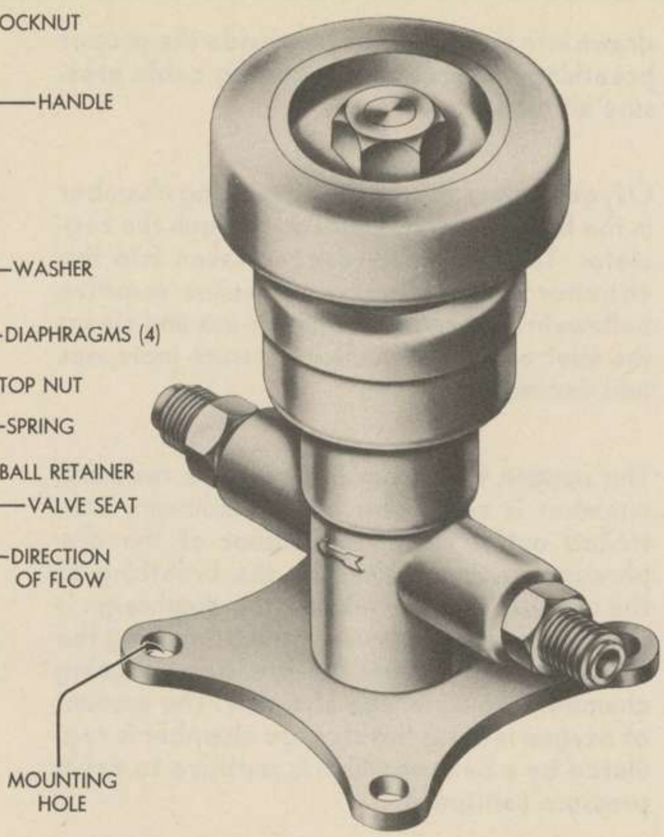

SHUT-OFF VALVE

PURPOSE: To shut off the flow of oxygen through the crossover lines in the forward and aft oxygen distribution systems, and to shut off the flow of oxygen to the tail gunner's compartment in an emergency.

LOCATION: One shut-off valve is on the inboard face of the engineer's stand, one on the forward pressure bulkhead of the aft pressurized compartment and one above the lower right hand berth in the line to the tail gunner's compartment.

OPERATION: The valve consists of two main assemblies, sealed from each other by three bronze sealing diaphragms through which the screw motion is transmitted to the valve plunger. When the valve handle is turned to open the valve and permit the oxygen to flow, a compression spring pushes the valve plunger up, raising the valve off its seat.

MAINTENANCE: Broken diaphragms must be replaced. If none are available, temporary replacement can be made from phosphorus bronze approximately .004 inch thick, cut to a diameter of 1.187 inches. Never use iron, steel or other metals for the diaphragms as the oxygen will combine with these materials and under some conditions will cause fire.

Oxygen valve parts require no lubrication. Never allow oil or grease to come in contact with the parts as it may cause an explosion. A mixture of litharge and glycerine must be used on the threads of the outlet and inlet connections.

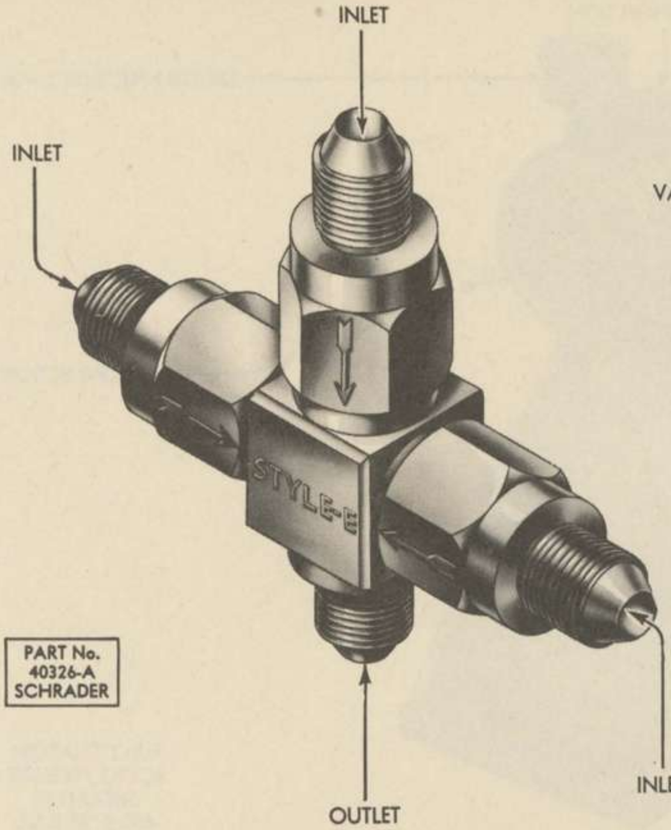

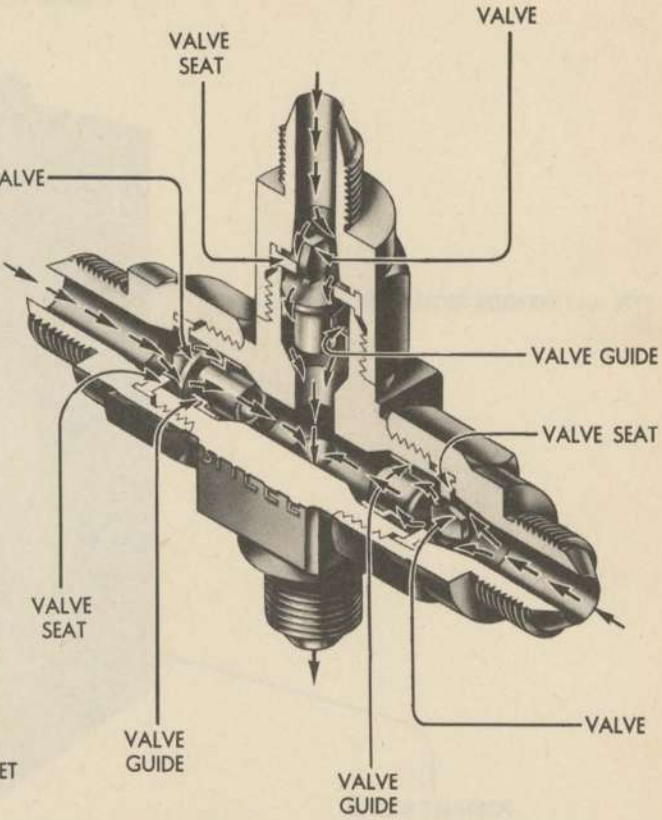

TRIPLE CHECK VALVE

The triple check valve manifolds three lines into a single line, and also prevents reverse flow of oxygen from the single line into the three joining lines. This is accomplished by means of a shuttle valve at each of the three inlet ports. When the pressure at the inlet of the shuttle valve is greater than the pressure in the valve, the valve opens and permits oxygen to enter the outlet port and line.

When the pressure on the shuttle valve is greater than the pressure at the inlet, the valve closes against a rubber seat and cuts off the inlet line.

Each of the inlet shuttle valves operates in this manner. When an oxygen cylinder or a line connected to any inlet is removed or damaged, the shuttle valve of that inlet closes and prevents the loss of oxygen from the other two cylinder lines manifolded to the valve.

Double check valves also are used in the system. They are similar in construction to the triple check valves.

Direction of flow is indicated by an arrow on the outside of each inlet port.

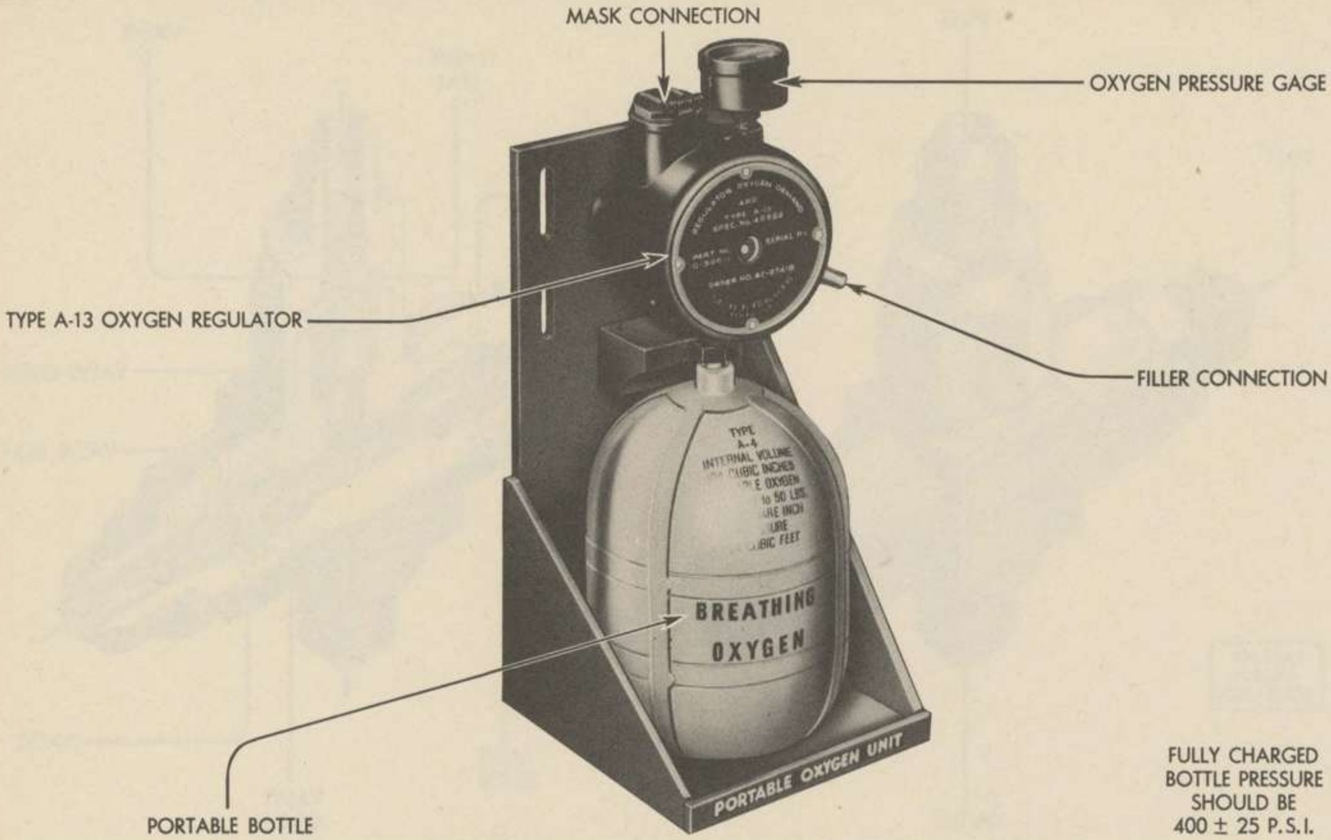

FULLY CHARGED
BOTTLE PRESSURE
SHOULD BE
400 ± 25 P.S.I.

TYPE A-4 PORTABLE OXYGEN UNIT

Crew members cannot retain consciousness for more than a few seconds at high altitudes (cabin) without additional oxygen. If a crew member must leave his normal position to go to another part of the airplane, he must use his portable oxygen or "walk-around" bottle.

Oxygen bottles are filled from the airplane's oxygen system just before they are to be used. To do this, the bottle filler nozzle (part of the regulator assembly on the bottle) is inserted into a portable bottle refill valve, one of which is located on the oxygen panel at each crew station.

When inserted into the refill valve, the bottle will fill to the pressure existing in the airplane's oxygen system. When bottle pressure equals the airplane system pressure, the bottle is full and ready for use. This pressure may be determined by noting either the bottle pressure on the gage on top of the portable bottle regulator, or when oxygen can no longer be heard passing into the bottle.

Portable bottles last from six to twelve minutes, depending upon the original pressure in the system from which the bottle was filled and upon the activity of the user. The approximate supply remaining may be determined by noting the pressure gage and the rapidity with which the needle approaches the low pressure warning mark.

A demand regulator is included with each portable bottle. It is similar in principle to the demand regulators of the main system. However, it provides only pure oxygen at each inhalation and has no provision for mixing oxygen with air in proportion to altitude as in the main system regulators.

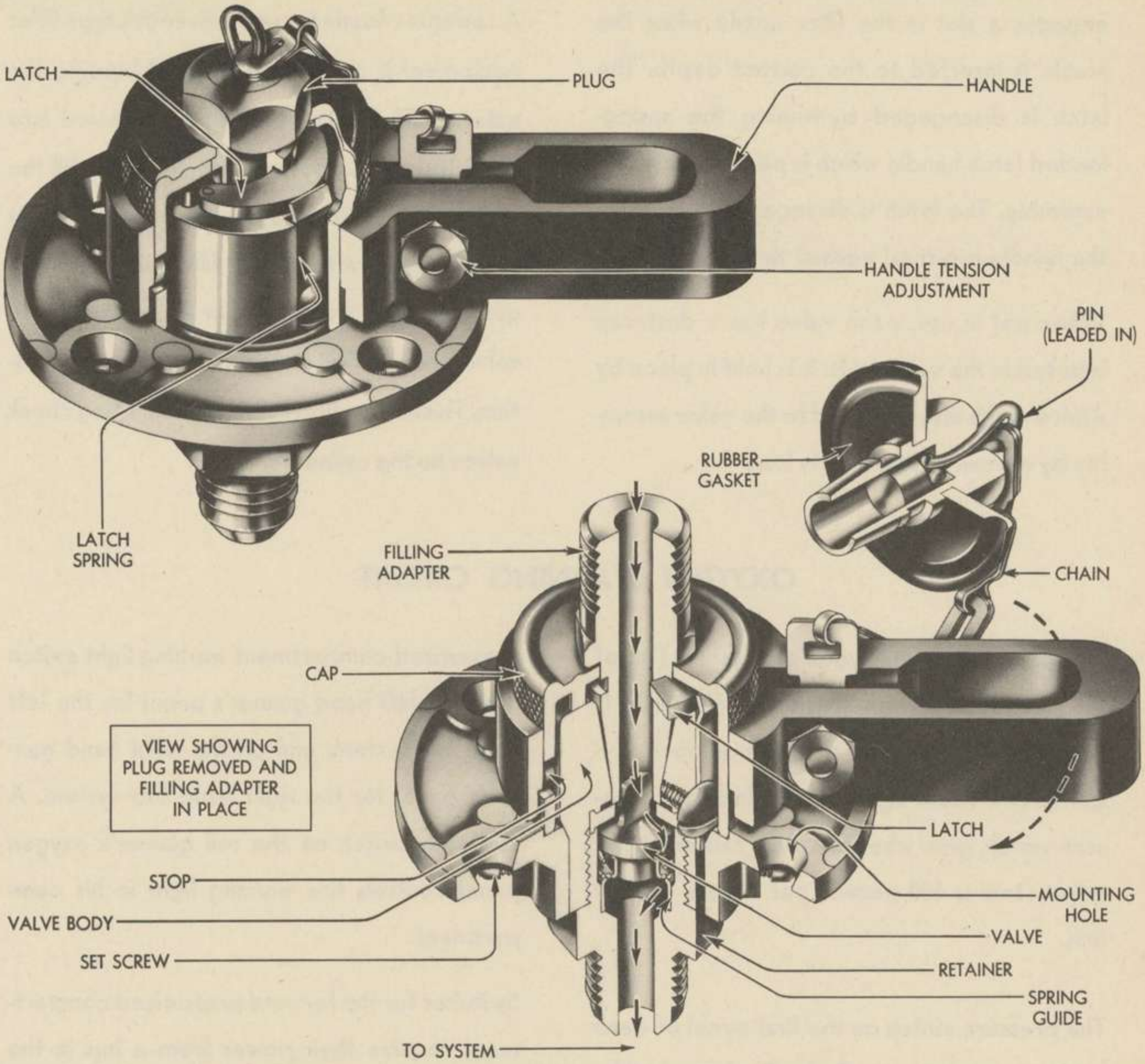

FILLER VALVE

PURPOSE: To provide a means of filling the airplane's oxygen cylinders and also a means of filling portable oxygen bottles from the oxygen supply system.

LOCATION: The main filler valve is externally located in the bomb bay, below the wing on the left hand side of the fuselage. Portable bottle filler valves are located on the oxygen panels at each of the fourteen crew stations.

OPERATION: The valve consists of two main parts: the body and the core. The valve core which closes the inlet port is spring-loaded and is normally closed, seating against a rubber gasket. The core is forced into the open position by inserting a filler nozzle far enough into the inlet to contact the top of the core and overpower the spring.

A spring latching mechanism on the valve engages a slot in the filler nozzle when the nozzle is inserted to the correct depth. The latch is disengaged by turning the spring-loaded latch handle which is part of the valve assembly. The latch is disengaged only while the handle is turned against the spring.

When not in use, each valve has a dust cap inserted in the valve inlet. It is held in place by a latch and is also attached to the valve assembly by a chain to prevent its loss.

An adapter nozzle for use with British type filler equipment is chained to the well housing the external filler valve. It must be screwed into the British fitting before attempting to fill the system. The British adapter must also be thrust into the valve after every filling to allow oxygen to escape from the filler line between the valve and the first bottle in the airplane's system. This insures firm seating of the filling check valves on the cylinders.

OXYGEN WARNING CIRCUIT

Low pressure of an oxygen sub system (or, of the complete system, if the shut-off valve is open) is indicated by a red light on each oxygen panel. These lights, controlled by a pressure switch, glow when pressure existing in the sub system is 100 pounds per square inch or less.

The pressure switch on the first panel of each sub system is composed of a diaphragm and a microswitch. When pressure from the associated sub system is less than 100 pounds per square inch, the diaphragm flexes and closes the switch to turn on the warning lights.

Forward pressurized compartment warning lights for the right hand sub system are controlled by a warning switch on the radio operator's oxygen panel. The switch for the left hand sub system is on the navigator's panel. The aft pressurized compartment warning light switch is on the left hand gunner's panel for the left hand sub system, and on the right hand gunner's panel for the right hand sub system. A separate switch on the tail gunner's oxygen panel controls the warning light in his compartment.

Switches for the forward pressurized compartment receive their power from a bus in the engineer's forward fuse panel. When low pressure closes the warning switch, the circuit is completed through the switch and through each warning light. Each light is grounded.

Aft compartment switches receive power from station 646 fuse shield (number 862) and the tail gunner's switch receives power from the tail skid junction shield (number 539) forward of the tail gunner's compartment pressure bulkhead.

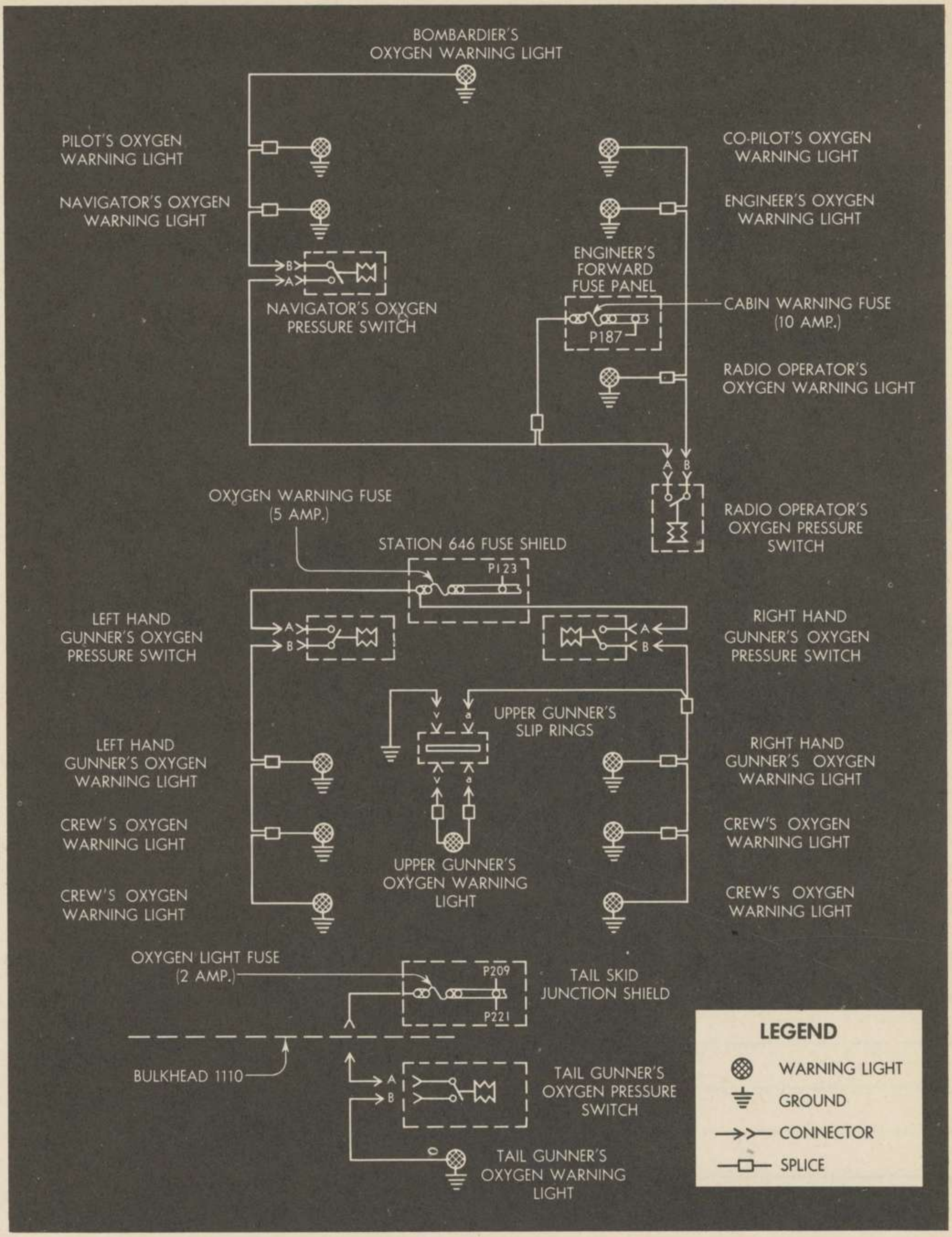

OXYGEN WARNING LIGHT CIRCUIT

NOTES

GROUND HANDLING AND LUBRICATION

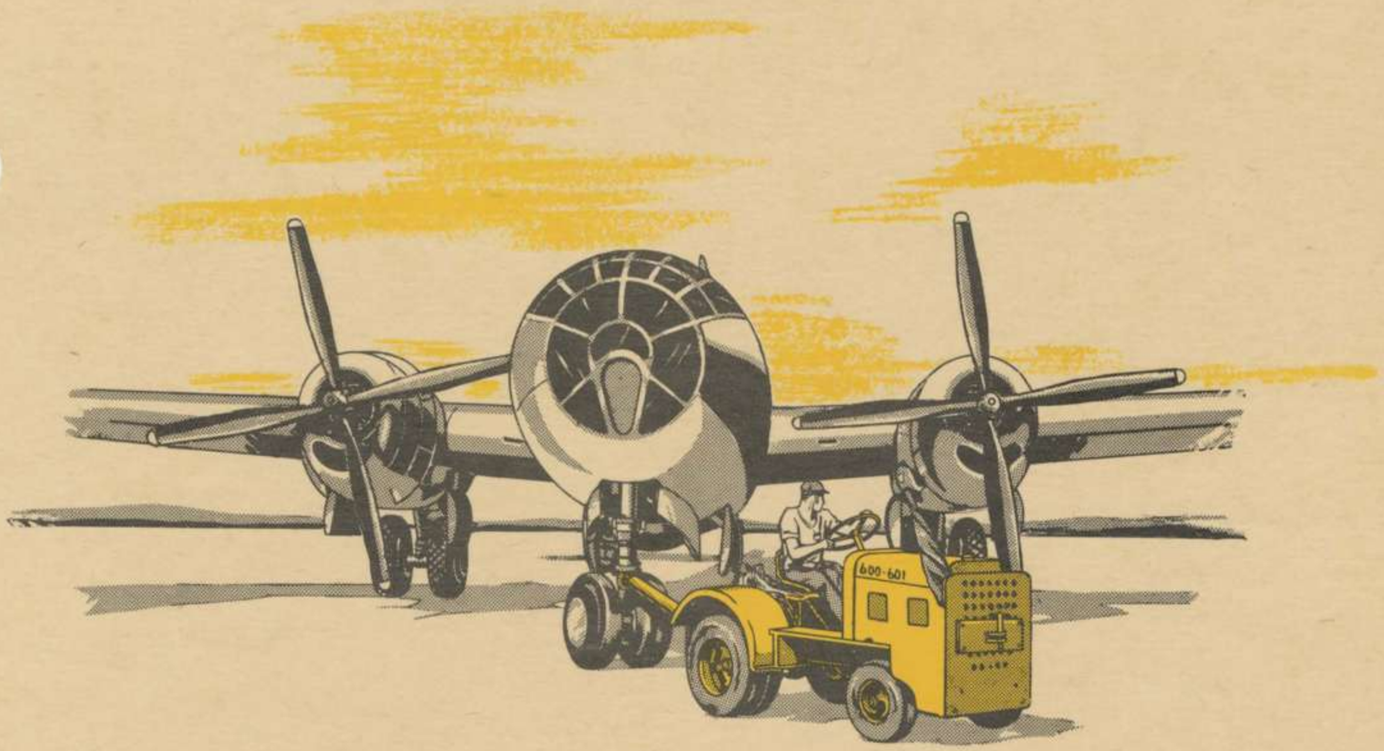

B-29 AIRPLANE

GROUND HANDLING
AND LUBRICATION

GROUND HANDLING AND LUBRICATION

TABLE OF CONTENTS

GROUND HANDLING

GENERAL DESCRIPTON: Improper handling of the airplane on the ground can cause serious damage to the airplane and injury or death to personnel. Time can be saved and trouble avoided by careful planning before jacking, towing, mooring, lubricating, or replenishing the airplane. An attempt has been made to cover, in this section, most of the problems encountered in handling an airplane of this size and weight. Many problems will arise requiring an understanding of the allowable loads which may be imposed on parts of the structure. Such problems call for initiative and sound judgment on the part of ground personnel.

The Air Service Command is continually studying methods of ground handling airplanes to obtain the most practical equipment. A recent development is the use of air bags of reinforced rubberized material to raise the airplane in case of a wheel up landing or similar accident. After placing the deflated bags under the wing, they are inflated with air supplied from a gasoline-powered air compressor. The rate of inflation is controlled by a hand-operated relief valve. The bags are inflated until the airplane is raised high enough to place jacks under the wing and nose wheel well or to permit the landing gear to be extended. Since the bags cover a large area under the wings, there is little danger that they will cause damage to the structure and high air pressures will not be necessary to raise the airplane.

Special collapsible jacks can be stowed in the airplane.

Lubrication of the airplane has been simplified by the use of only three lubricants. Other than a standard zerk grease gun, no special lubricating tools are necessary.

For replenishing, all tanks are readily accessible and require the use of standard oils and fuels only. A funnel is useful in filling the shock struts.

A list is furnished of all special tools and ground equipment for use with the airplane. Some of the tools are flyaway equipment with only every third or fifth airplane. Therefore, an accurate account should be kept to insure equal distribution of these tools among the operating squadrons. Ground equipment, not furnished by the contractor, is supplied by the Air Service Command.

JACKING

It is often necessary to jack the airplane to prevent structural damage when removing a wheel or wing fuel tank, or performing similar maintenance. Jacking also stabilizes the airplane so that various work can be performed with safety.

The method of jacking the airplane depends on the type and the location of the work to be done. A survey of the jacking cone locations on the airplane and a knowledge of the safe loads for the different locations make the arrangement of the jacks apparent. (See illustration.)

When jacking in an exposed area, head the airplane into the wind. Before jacking the airplane, place all switches in the OFF position, release the parking brakes and remove the wheel chocks. As the airplane is raised on the jacks, extension of the shock struts causes the wheels to roll forward. Braking or chocking the wheels restrains their forward motion and tends to force the airplane backward off the jacks.

The most practical method of raising the entire airplane is to use jacks at the nose, both sides of the wing, and the tail. When the tail cone is used, the tail jack must not be required to support a part of the weight; it is used only to insure longitudinal stability. Therefore, the tail jack should "follow" the other jacks as the airplane is raised; and should "lead" the other jacks when the airplane is being lowered. All main jacks must be operated at the same time to distribute the load evenly.

If a high wind arises while an airplane is on jacks and it cannot be lowered on its wheels, moor it tightly in the jacked position. Timber or cable braces from the ground to the tops of the jacks will help to relieve side loads from the jacks. Unless hurricane wind velocities are encountered, it is not likely that the airplane will lift from the jack pads.

When the complete airplane is to be jacked, it is advisable to deflate the shock struts of the main and nose wheel landing gear by partially unscrewing the air valve and allowing the air to escape gradually. This eliminates any tendency of the shock strut to bounce the airplane off the jacks when it is being raised (as might happen when a shock strut "hangs up" and then releases suddenly).

To test the landing gear, jack the airplane at the nose, at the left and right wing panels and at the tail. Although the nose jacking cone is located in the nose wheel well, the doors are designed so that they can be retracted with the nose jack in place, by removing the two small plates on the aft inboard edges of the doors. This allows the doors to clear the extending screw on the jack.

Spacer bars inserted into the torsion link bearings on the main or nose gear maintain the shock struts in the compressed position. When changing tires or wheels, spacer bars are used so the airplane will not have to be jacked up as high to raise the wheels from the ground.

CAUTION: Always release the air pressure from the shock struts when spacer bars are used on the torsion links. Never attempt to retract the landing gear when spacer bars are installed.

One or two engines may be removed without shifting the center of gravity of the airplane far enough aft to cause unbalance. Before the airplane will tip up off the nose wheel the center of gravity must be aft of 44 percent of the M.A.C. (mean aerodynamic chord). However as a safety precaution when removing or replacing an engine, the wheels must be chocked tightly and a jack should be used under the tail cone to stabilize the airplane.

When planning a jacking procedure for the removal or replacement of major weight components of the airplane, use the slide-rule load adjuster for computing the change in the airplane's center of gravity. Each airplane has a load adjuster and a Technical Order containing instructions for its use.

To remove the wing fuel tank doors inboard of the outboard nacelles, first partially or totally support the airplane at either the inboard or outboard wing jack cones on both sides of the airplane. Place pole jacks (4) under each side fitting of both nacelles located on the same side of the airplane as the tank door to be removed. When any of the tank doors are removed, care should be exercised in supporting the wing as the tank doors contribute to the structural support of the wing cantilever weight. The airplane may be towed when the tank doors are off, but it should be done carefully and only on a smooth surface.

The tail jacking cone is not designed to take heavy loads, and is used only to steady the airplane. Never place a jack at the nose jack cone location and the tail jack cone only, as lowering of the temperature and contraction of the air in the shock strut may cause the main shock strut to deflate or the main wheel tires may go flat. Either of these conditions imposes excessive loads on the tail jack location and the surrounding structure. When raising or lowering the airplane on jacks, always have someone operate the tail jack so as to prevent excessive loads being imposed on the surrounding structure due to either raising of the nose jack or lowering of the wing jacks.
nose jack or lowering of the wing jacks. It is desirable to use a tail jack which will fail with a load greater than 2500 pounds. When making engine changes, it is permissible to use only a tail jack since if the main gear tires or shock struts deflate and lower the airplane, the nose wheel and strut will compress so that excessive loads will not be imposed at the tail jacking cone location.

When raising the airplane on jacks, do not raise one jack more than four inches (observe previously mentioned limitations for nose and tail jacks) without raising another jack the same distance to level the airplane. Jacking more than four inches at any one jack pivots the airplane about another jack location, imposing side loads for which the jacks are not designed.

Two leveling brackets are provided on the left side and one on the right side in the forward bomb bay section of the airplane. The two left side brackets are used to check the longitudinal level position of the airplane, while the forward left side bracket and the right side bracket are used to check the horizontal level position.

Leveling is accomplished by placing the airplane on jacks and varying the lift of the jacks. A spirit level placed on a rigid straight edge or bar with the bar resting on the bomb bay brackets indicates how much the individual jacks must be lowered or raised to level the airplane.

NOTES

JACKING LOADS

TAXI POSITION AND LATERALLY LEVEL

JACKING CONE LOCATIONS	MAXIMUM JACK PAD LOADS (POUNDS)
A- NOSE JACKING CONE	20,000
B- INBOARD WING JACKING CONE	75,000
C- OUTBOARD WING JACKING CONE	50,000
D- MAIN LANDING GEAR JACKING CONE	75,000
(**E***)- TAIL JACKING CONE	2,500

(E*) FOR STEADYING THE AIRPLANE ONLY

JACKING ENTIRE AIRPLANE

JACKING POINT COMBINATIONS	PERMISSIBLE LOAD MAXIMUM GROSS WEIGHT POUNDS	CENTER OF GRAVITY RANGE IN % MAC. (WHEELS UP)
A-D-D-(**E***)	105,000	18 TO 30
A-C-C-(**E***)	154,000	18 TO 30
A-B-B-(**E***)	120,000	18 TO 30
A-B-B-(**E***)	105,000	22 TO 30
A-C-D-(**E***)	128,000	18 TO 30
A-B-D-(**E***)	105,000	18 TO 30

(E*) FOR STEADYING THE AIRPLANE ONLY

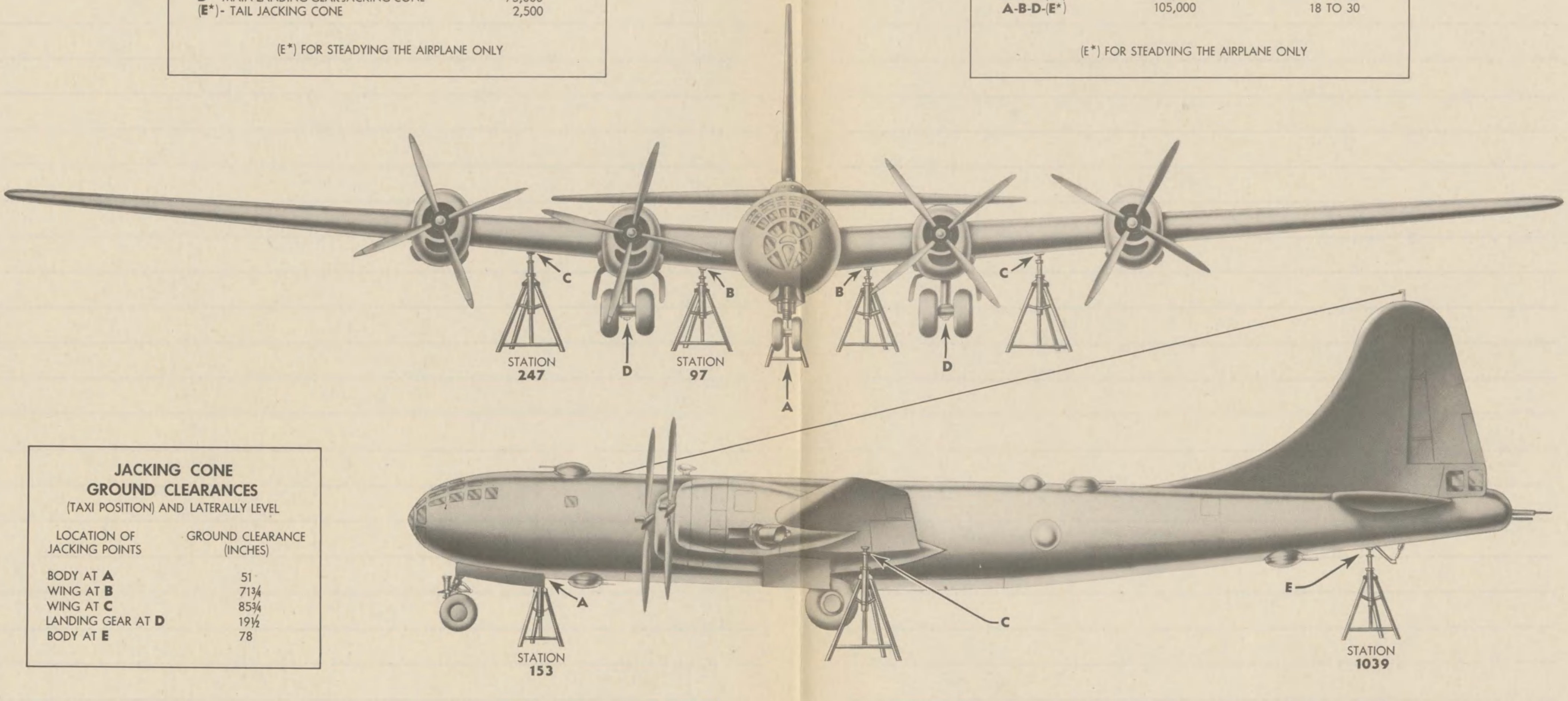

JACKING CONE GROUND CLEARANCES

(TAXI POSITION) AND LATERALLY LEVEL

LOCATION OF JACKING POINTS	GROUND CLEARANCE (INCHES)
BODY AT **A**	51
WING AT **B**	71¾
WING AT **C**	85¾
LANDING GEAR AT **D**	19½
BODY AT **E**	78

JACKING POINTS, CLEARANCES AND LOADS

NOTES

NOTES

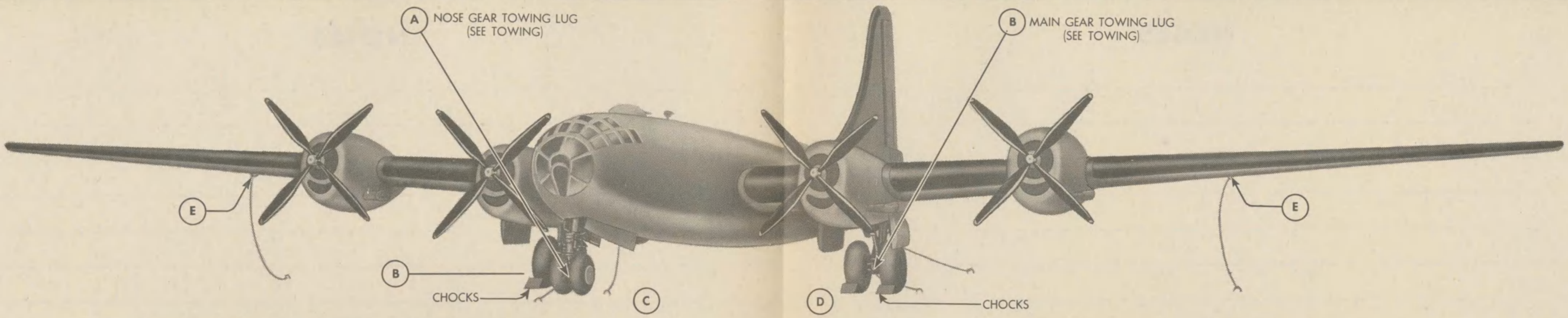

ATTACHMENT OF MOORING ROPES OR CABLES

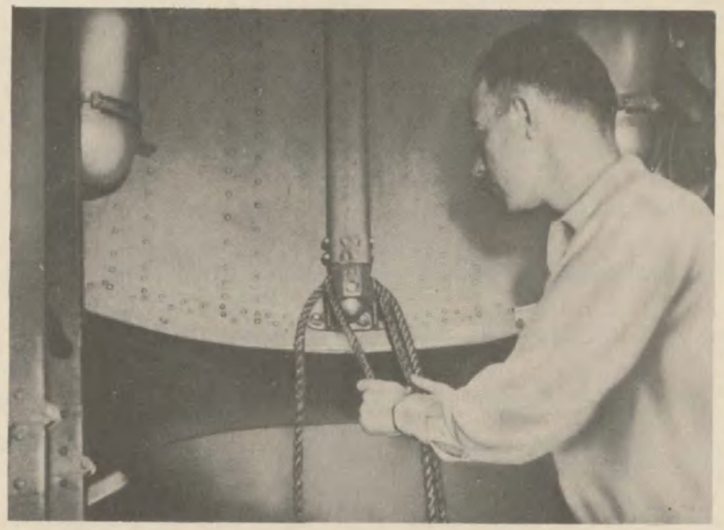

Ⓒ ATTACHMENT TO THE NOSE WHEEL TIE DOWN FITTING AND ANCHORING TO THE GROUND

Ⓔ ATTACHMENT TO WING EYEBOLT TIE DOWN FITTING

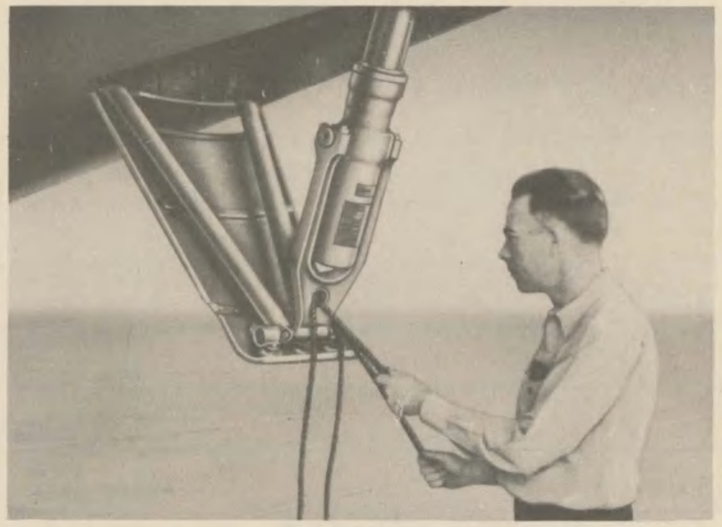

Ⓓ ATTACHMENT TO THE TAIL SKID YOKE AND ANCHORING TO THE GROUND

NOTES

MOORING

The airplane must be moored when it is to be left inoperative on the ground in an open area for an extended period. The airplane is moored by securing it to the ground, as shown in the illustration. Two eye-bolt fittings on the wing, the tie-down fitting in the nose wheel well, the nose and main gear towing lugs, and the hole in the tail skid strut assembly yoke may be used in mooring the airplane. It is important to head the airplane into the wind to prevent shifting of the mooring position and unnecessary side loads on the vertical surfaces.

Before tying the mooring ropes, a complete survey should be made of the airplane, and the following duties performed: After making sure that the brake drums are cool, set the parking brakes. Place chocks on both sides of each main gear wheel. Move the rudder pedals to the neutral position and pull the throttles back to the closed position. Place the ailerons in neutral and move the elevators down, by turning the aileron control wheel to neutral and then pushing the control column full foward. Lock these controls by setting the surface lock lever on the pilot's aisle stand to the full aft or LOCK position. Leave the bomb doors open to serve as an entrance in case of fire. Close other doors, exits, and openings to protect the interior of the airplane. Make sure the hydraulic gages show a reading of 800 to 1000 pounds per square inch. Before leaving the airplane, place all switches in the OFF position.

When attaching ropes to the wing, leave 18 to 24 inches of slack; this prevents possible damage to the structure if a tire or shock strut deflates and raises the opposite portion of the airplane.

When the airplane is moored where it is exposed to severe weather conditions such as high wind, dust, rain, snow, or low temperatures, install covers on the engines, airplane nose, sighting domes, and pitot tubes. The covers are stowed under the floor in the aft pressurized compartment.

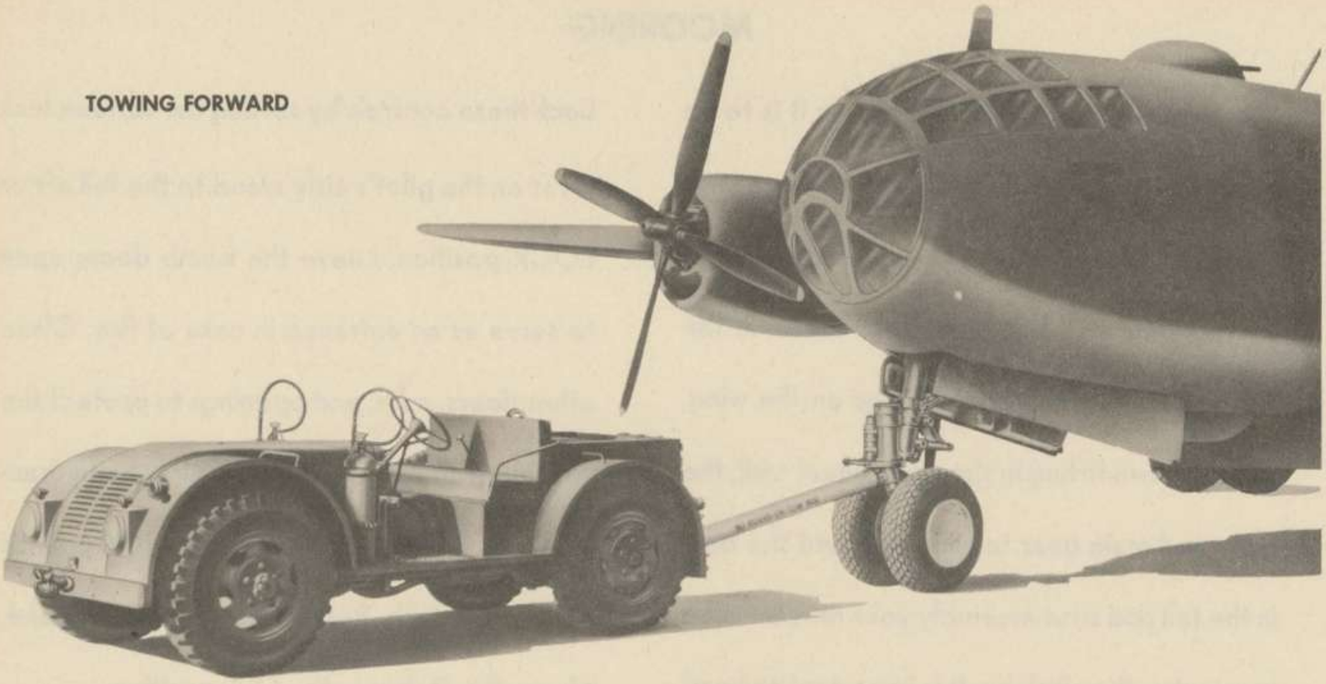
TOWING FORWARD

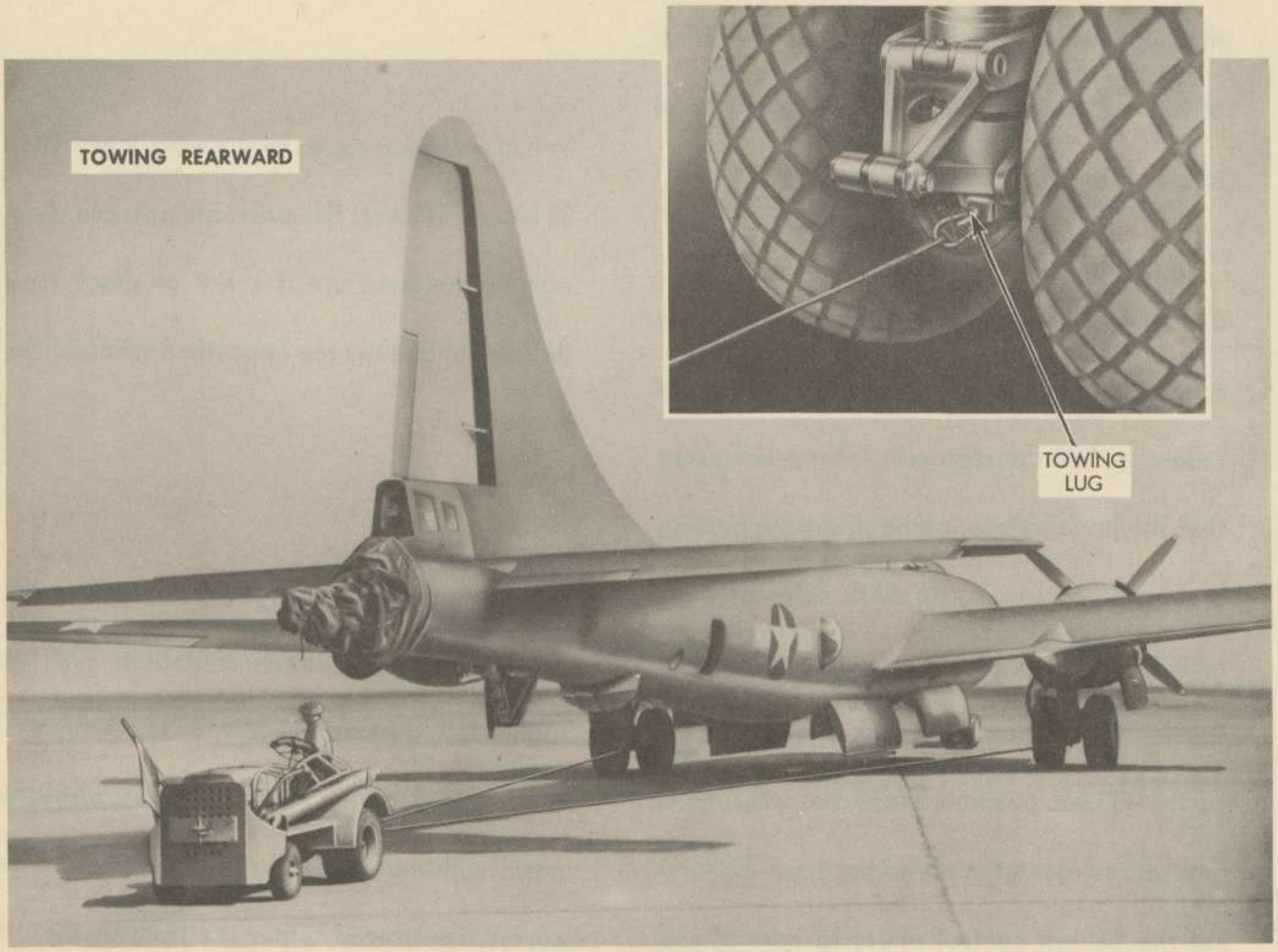
TOWING REARWARD

TOWING

TOWING

When the airplane is being towed, a crew member must ride in the forward compartment to operate the brake pedals. His duties are: to turn the engineer's battery switch and the emergency ignition switches to the ON position; to see that the hydraulic pump operates or that the hydraulic gages indicate a pressure of 800 to 1000 pounds per square inch; to release the parking brake and to operate the brake pedals while the airplane is in motion.

The airplane may be towed forward or backward. The forward towing lug is attached to the nose gear knuckle assembly. Since the nose wheel swivels within an arc of 136 degrees (68 degrees on either side of the centered position), the initial towing forces at the start of the tow can be made in any direction within this arc. However, to avoid imposing unnecessary stresses on the landing gear, the initial towing and structure force should be applied as close to the forward direction as space permits. Care should be taken to start slowly and to avoid sudden stops and jerks. The maximum starting towing load of 20,000 pounds may be applied directly forward only.

A lug is attached to the rear side of each main landing gear strut for towing the airplane backward. The maximum backward towing load of 24,000 pounds must be applied directly aft. Two ropes or cables of equal length are used to keep the aft towing force parallel with the centerline of the airplane. Use the towing bar attached to the nose wheel towing lug to steer the airplane when towing backward. The airplane may be towed backward on a smooth surface by attaching only one cable to one main landing gear towing lug. Then, by using a steering bar on the nose wheel, and careful application of the brakes, the airplane can be towed directly backward or in wide turns. After the towing has been completed, set the parking brakes.

REPLENISHING DIAGRAM

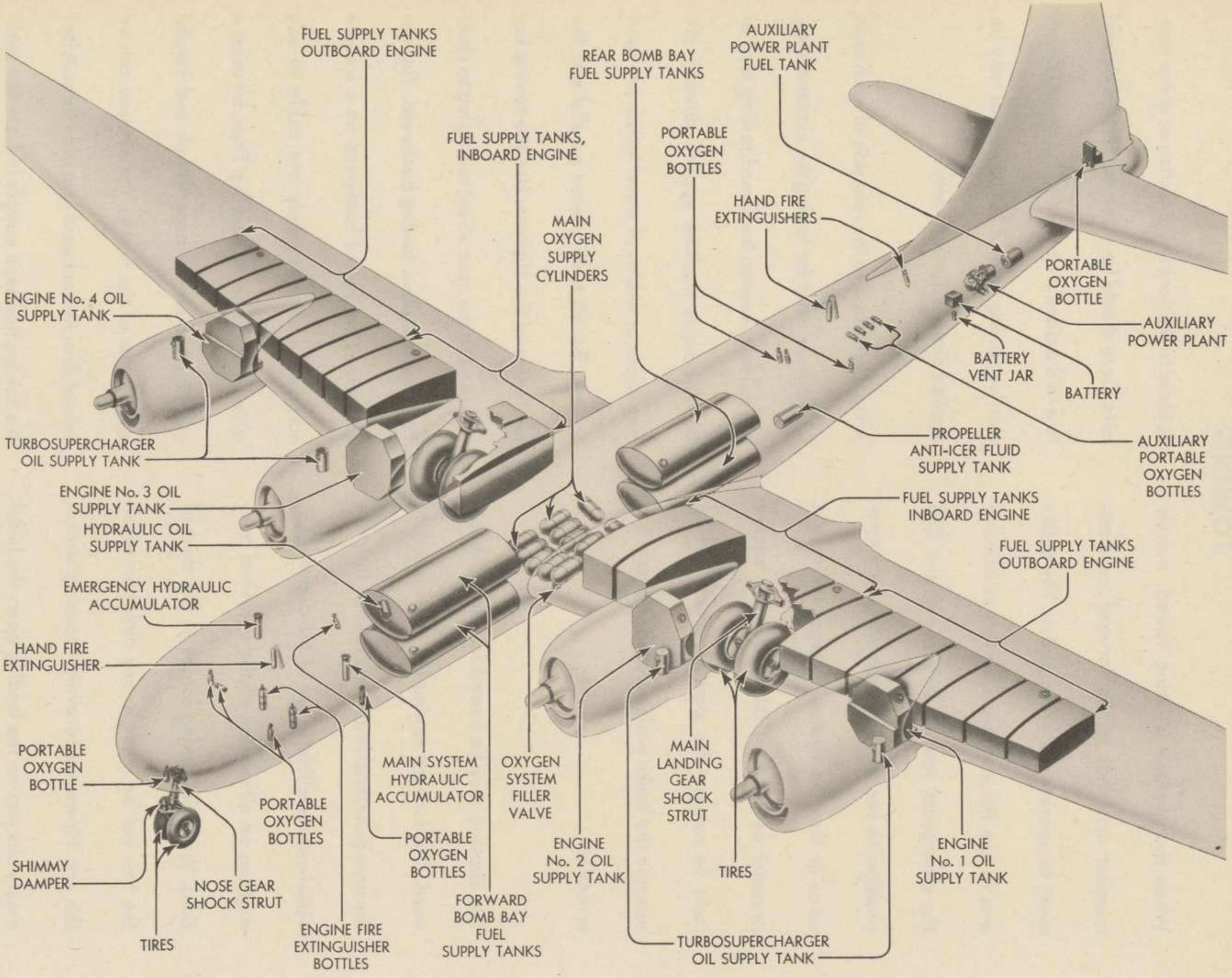

ITEM	CAPACITY	SPECIFICATIONS	LOCATION	GAGE LOCATION	ACCESS
OUTBOARD FUEL TANKS	1324 U.S. GALLONS EACH SEE NOTE 1	AN-VV-F-781 AND N-2 (100 OCTANE)	WING	ENGINEER'S INSTRUMENT PANEL	FILLER NECK ACCESS DOOR ON UPPER WING SURFACE
INBOARD FUEL TANKS	1459 U.S. GALLONS EACH SEE NOTE 1				
BOMB BAY FUEL TANKS	640 U.S. GALLONS EACH SEE NOTE 1		BOMB BAYS	UPPER SIDE OF TANK	FILLER NECK TOP OF TANK IN BOMB BAY
AUXILIAY POWER PLANT FUEL TANK	4 U.S. GALLON		LEFT SIDE OF AIRPLANE AFT OF 834 PRESSURE BULKHEAD		
AUXILIAY POWER PLANT OIL TANK	2.2 QUARTS	AN-VV-O-466A GRADE 1065			
ENGINE OIL TANKS	80 U.S. GALLONS EACH SEE NOTE 2	AN-VV-O-446A GRADE 1120	FORWARD OF FIREWALL EACH NACELLE	ENGINEER'S INSTRUMENT PANEL	FILLER NECK ACCESS DOOR ON UPPER SURFACE OF NACELLE
TURBOSUPERCHARGER OIL SUPPLY TANKS	2 U.S. GALLONS EACH	HYDRAULIC FLUID AN-VV-O-366A	OUTBOARD SIDE OF EACH NACELLE	NONE	NACELLE SIDE ACCESS DOOR
HYDRAULIC OIL SUPPLY TANK	4.9 U.S. GALLONS SEE NOTE 3		ABOVE NAVIGATOR'S CABINET	ON TANK	
HYDRAULIC ACCUMULATORS	AIR CHARGE 400 P.S.I. 1000 LBS. WORKING PRESSURE	DRY AIR	MAIN SYSTEM: UNDER FLOOR FORWARD OF 218 PRESSURE BULKHEAD	CO-PILOT'S PANEL	ACCESS DOOR IN BULKHEAD AT STA. 218
			EMERGENCY: AFT OF ENGINEER	ENGINEER'S PANEL	CABIN
PROPELLER ANTI-ICER FLUID SUPPLY TANK	24 U.S. GALLONS	ISO PROPYL ALCOHOL AN-F-13	UNDER FLOOR AFT OF 646 PRESSURE BULKHEAD	ABOVE FILLER NECK	ACCESS DOOR IN CABIN FLOOR
BATTERY	FILL TO REQUIRED LEVEL	DISTILLED WATER SEE NOTE 4	OPPOSITE REAR ENTRANCE DOOR	NONE	
BATTERY VENT JAR	1 PINT	BARIUM HYDROXIDE SATURATED SOLUTION			

REPLENISHING CHART (A)

ITEM		CAPACITY	SPECIFICATIONS	LOCATION	GAGE LOCATION	ACCESS
OXYGEN	MAIN SYSTEM CYLINDERS	2100 CU. IN. EACH 450 P.S.I.	COMPRESSED OXYGEN	BETWEEN BOMB BAYS	14 STATION PANELS	ACCESS DOOR IN FUSELAGE BELOW OXYGEN PANEL
	PORTABLE BOTTLES	104 CU. IN. EACH		ALL CREW STATIONS	ON BOTTLE	
TIRES	MAIN	75 TO 85 P. S. I.		WHEELS — MAIN LANDING GEAR	23.3 ROLLING RADIUS	
	NOSE	50 TO 57 P. S. I.		WHEELS — NOSE LANDING GEAR	15.3 ROLLING RADIUS	
NOSE AND MAIN LANDING GEAR SHOCK STRUTS	OIL	FILL TO AIR VALVE	AN-VV-O-366A	NEAR TOP OF SHOCK STRUT	NONE	
	AIR				INFLATE UNTIL DISTANCE BETWEEN TORSION PIN CENTERS ARE 13¼ IN. ON MAIN, 10 IN. ON NOSE	
SHIMMY DAMPER		SEE NOTE 5	HOUDAILLE L1404 OR CASTOR OIL AN-JJJ-O-316	NOSE GEAR SPINDLE	ROD AND SLOTTED HOUSING ON TOP OF DAMPER	USE ZERK LUBRICATING GUN
ENGINE FIRE EXTINGUISHER BOTTLES		12.06 LBS. 2000 P.S.I.	CARBON DIOXIDE	NOSE WHEEL WELL	NONE	
HAND FIRE EXTINGUISHERS	A-17		CARBON DIOXIDE	FORWARD CABIN AUXILIARY CREW COMPARTMENT	NONE	
	A-2		CARBON TETRACHLORIDE	BY REAR ACCESS DOOR		

NOTES

1 PLUS 43 U.S. GALLON EXPANSION SPACE FOR EACH OUTBOARD TANK.
PLUS 67 U.S. GALLON EXPANSION SPACE FOR EACH INBOARD TANK.
PLUS 20 U.S. GALLON EXPANSION SPACE FOR EACH BOMB BAY TANK.

2 PLUS 10 U.S. GALLON EXPANSION SPACE FOR EACH TANK.

3 SET PARKING BRAKES, BRING PRESSURE TO 1000 P.S.I. IN BOTH NORMAL AND EMERGENCY SYSTEMS, THEN FILL TO 2 GALLONS.

4 IN COLD WEATHER FILL ONLY WHEN BEING CHARGED BY ENGINES. IF BATTERY TESTS BELOW 1200 REPLACE BATTERY.

5 DAMPER SHOULD BE REFILLED UNTIL TOP OF ROD IS EVEN WITH SLOT IN THE INDICATOR HOUSING.

REPLENISHING CHART (B)

NOTES

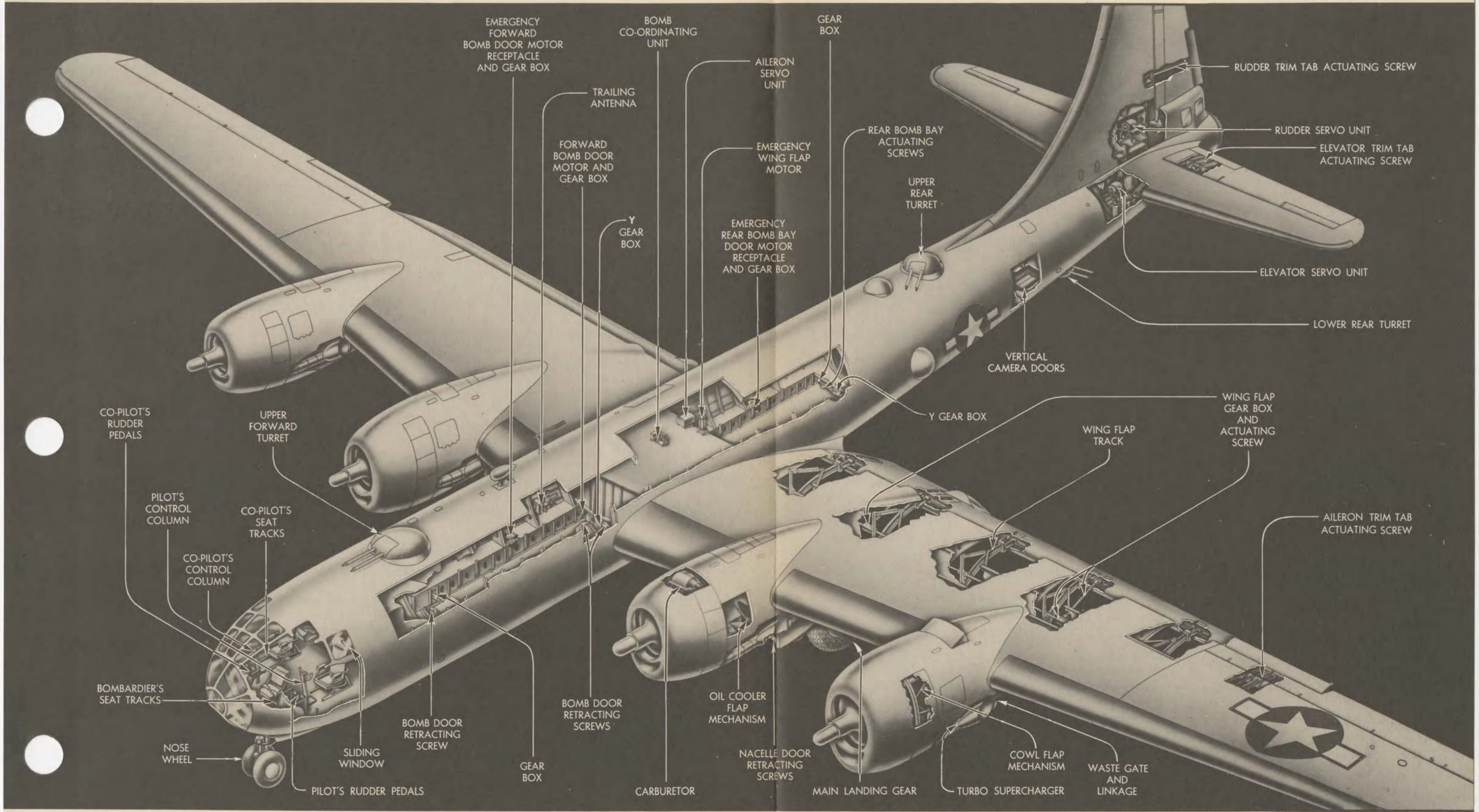

LUBRICATION DIAGRAM

NOTES

LUBRICATION

GENERAL INSTRUCTIONS: Complete lubrication of the airplane is accomplished by the use of lubricating greases in accordance with specification AN-G-3, AN-G-10, 3560 medium, and aircraft instrument oil in accordance with specification AN-0-6, which has superseded specification 2-27. Beacon lubricant M-285 and Penola WS 338 are the most common lubricants covered by specifications AN-G-3 and AN-G-10 respectively. Both are low temperature lubricants.

Before applying lubricant, wipe the part free of all old grease and dirt. Before repacking and reassembling parts such as bearings which are removed for lubrication, clean them with an approved cleaning solvent. White, unleaded gasoline may be used for this purpose.

Immediately after a part or fitting has been lubricated, wipe away excess grease which may have gathered or squeezed out around the part or fitting. Normally 3 or 4 thrusts of the lubrication gun will be sufficient for a zerk fitting. When the grease can be seen oozing from the part, it is considered amply lubricated.

Avoid indiscriminate greasing and over-lubrication as it may lead to malfunctioning of the part. For example, gear boxes and enclosed universals should be filled to approximately 1/3 of their capacity only; since more than this amount seriously increases the operating loads in the unit at low temperatures.

For parts requiring aircraft instrument oil, a few drops are generally sufficient.

CAUTION: Keep all grease and oil away from the oxygen system and its fittings.

Specific instructions for each unit requiring lubrication are given in the accompanying charts. The location of the various units and their lubrication periods are shown on the lubrication diagram. By carefully following the charts and diagrams, a systematic and efficient lubrication procedure can be planned for servicing this airplane.

NAME	LOCATION	HOURLY PERIOD	LUBRICANT	INSTRUCTIONS
TRUNNION ASSEMBLY	NOSE GEAR	25	AN-G-3	2 ZERK FITTINGS.
COLLAR	ATTACHING YOKE ASSEMBLY TO SHOCK STRUT	25	AN-G-3	2 ZERK FITTINGS.
TORSION LINK	BELOW SHOCK STRUT	25	AN-G-3	6 ZERK FITTINGS.
DRAG STRUT	RETRACTING LINKAGE	25	AN-G-3	2 ZERK FITTINGS.
SUPPORT ASSEMBLY	RETRACTING MECHANISM	25	AN-G-3	2 ZERK FITTINGS.
ATTACHMENT	RETRACTING SCREW TO DRAG STRUT	25	AN-G-3	2 ZERK FITTINGS.
ATTACHMENT	DRAG STRUT TO WHEEL WELL	25	AN-G-3	2 ZERK FITTINGS.
ROCKER ARM BEARING	CENTERING MECHANISM	50	AN-G-3	(a) REMOVE DUST COVER ON NOSE WHEEL CENTERING MECHANISM AND LUBRICATE ZERK FITTING. (b) APPLY THIN COAT OF GREASE TO THE CAM SURFACE OF CENTERING MECHANISM.
RETRACTING SCREW	NOSE GEAR	100	AN-G-10	JACK THE AIRPLANE UNTIL THE NOSE GEAR IS COMPLETELY OFF THE GROUND. 1 ZERK FITTING UNDER INSPECTION PLATE WHEN GEAR IS DOWN. **CAUTION:** DO NOT OVER LUBRICATE.
RETRACTING SCREW GEAR BOX	UPPER END OF RETRACTING SCREW	200	3560 MED.	CHECK AND LUBRICATE AT 200 HOURS. THOROUGHLY FLUSH AND REFILL TO 1/3 CAPACITY AT 500 HOURS.
WHEEL BEARINGS	NOSE WHEELS	200	AN-G-3	JACK AIRPLANE OFF GROUND, RELEASE AIR FROM SHOCK STRUT AND PLACE SPACER BAR ON TORSION LINKS. REMOVE FAIRING, HUB CAP, COTTER PIN AND NUT. REMOVE WHEEL BUT DO NOT PERMIT OUTBOARD WHEEL BEARING TO FALL OFF. REMOVE THE BEARING FROM THE OUTBOARD SIDE OF THE WHEEL AND THE LOCK RING, GREASE RETAINERS, AND BEARING FROM THE INBOARD SIDE OF THE WHEELS AND CLEAN. APPLY A MEDIUM COAT OF GREASE OVER THE BEARING AND BEARING CUP. REPLACE THE INBOARD BEARING IN THE WHEEL WITH THE GREASE RETAINER AND LOCK RING. SLIP WHEEL ON AXLE AND THEN INSERT OUTBOARD WHEEL BEARING. REPLACE NUT ON AXLE AND TIGHTEN SLOWLY WITH WHEEL SPINNING UNTIL A BEARING DRAG IS NOTICED ON WHEEL. THEN BACK THE NUT OFF TO THE NEXT CASTELLATION AND LOCK IN POSITION WITH COTTER PIN.
CENTERING MECHANISM	NOSE WHEEL	200	AN-G-3	JACK THE AIRPLANE OFF THE GROUND, RELEASE AIR FROM SHOCK STRUT AND PLACE SPACER BAR ON TORSION LINKS. REMOVE DUST COVER ON MECHANISM. REMOVE ROCKER ARM. **WARNING:** COMPRESS CENTERING SPRING BY SPECIAL TOOL TO PREVENT DAMAGE TO THE BOLT THREADS UPON REMOVAL OF BOLT. REMOVE CENTERING SPRING. REMOVE THE COLLAR. REMOVE THE CAM. REMOVE SPECIAL BEARING RETAINER NUT FROM THE SPINDLE. REMOVE THE WASHER AND SHIELD. REMOVE THE BEARING FROM THE KNUCKLE BY USE OF A SPECIAL TOOL AS THIS IS A PRESS FIT. CLEAN AND REPACK UPPER AND LOWER BEARINGS. REASSEMBLE BY REVERSING THE ABOVE PROCEDURE.

NOSE GEAR LUBRICATION CHART

NAME	LOCATION	HOURLY PERIOD	LUBRICANT	INSTRUCTIONS
FITTING	DRAG STRUT TO FRONT WING SPAR	25	AN-G-3	2 ZERK FITTINGS.
UNIVERSAL DRAG LINK	LOWER ATTACHING FITTING	25	AN-G-3	2 ZERK FITTINGS.
TRUNNION	UPPER END OF GEAR	25	AN-G-3	2 ZERK FITTINGS.
TORSION LINK ASSEMBLY	BETWEEN OLEO AND AXLE	25	AN-G-3	6 ZERK FITTINGS.
ATTACHMENT	RETRACTING SCREW TO DRAG STRUT	25	AN-G-3	2 ZERK FITTINGS.
ATTACHMENT	DRAG STRUT TO UNIVERSAL DRAG LINKS	25	AN-G-3	2 ZERK FITTINGS.
RETRACTING SCREW	MAIN GEAR	100	AN-G-10	JACK AIRPLANE OFF THE GROUND. 1 ZERK FITTING UNDER INSPECTION PLATE WHEN GEAR IS DOWN. **CAUTION:** DO NOT OVER LUBRICATE.
RETRACTING SCREW GEAR BOX	UPPER END OF RETRACTING SCREW	200	AN-G-3	CHECK LEVEL AND LUBRICATE AT 200 HOURS. FLUSH AND REFILL TO 1/3 CAPACITY AT 500 HOURS.
WHEEL BEARINGS	MAIN GEAR	200	3560 MED.	RELEASE THE BRAKES AND DISCONNECT THE HYDRAULIC HOSE ON THE BRAKE ASSEMBLY. REMOVE THE NUT FROM THE AXLE AND REMOVE THE BRAKE ASSEMBLY. REMOVE THE WHEEL ASSEMBLY AND THEN REMOVE THE LOCK RING, GREASE RETAINERS, AND BEARINGS FROM BOTH SIDES OF THE WHEEL. CLEAN THOROUGHLY. REPACK BEARINGS AND BEARING CUPS. REASSEMBLE.
RETRACTING SCREW	NACELLE DOORS	200	AN-G-3	DISASSEMBLE MECHANISMS. APPLY A LIGHT COAT OF GREASE.
RETRACTING SCREW GEAR BOX	NEAR NACELLE DOOR RETRACTING MOTOR	200	AN-G-3	CHECK LEVEL AND REFILL TO 1/3 CAPACITY AT 200 HOURS. FLUSH AND REFILL TO 1/3 CAPACITY AT 500 HOURS.
EXPOSED UNIVERSALS	AT ATTACHMENT TO GEAR BOX OF THE NACELLE DOOR RETRACTING SCREW	50	AN-O-6	APPLY A FEW DROPS OF OIL ON EXPOSED SURFACE.

MAIN GEAR LUBRICATION CHART

NAME	LOCATION	HOURLY PERIOD	LUBRICANT	INSTRUCTIONS
COWL FLAP HINGE	COWL FLAPS	50	AN-G-3	1 ZERK FITTING AT EACH COWL FLAP HINGE. ACTUATE COWL FLAPS TO OPEN POSITION TO PROVIDE ACCESS FOR LUBRICATION.
COWL FLAP ACTUATORS AND DRIVES				LUBRICATED AT FACTORY WITH AN-G-3 FOR LIFE OF UNITS.
CARBURETOR CONTROL ARM LINKAGE	CARBURETOR	50	AN-O-6	APPLY A FEW DROPS OF OIL ON LINKAGE.
OIL COOLER FLAP ACTUATOR	OIL COOLER EXIT FLAP	200	AN-G-3	CHECK LEVEL AND REFILL TO ⅓ CAPACITY AT 200 HOURS. FLUSH AND REFILL TO ½ TO ¾ CAPACITY AT 1000 HOURS.
INTERCOOLER FLAP ACTUATOR	INTERCOOLER EXIT FLAP	200	AN-G-3	CHECK LEVEL AND REFILL TO ⅓ CAPACITY AT 200 HOURS. FLUSH AND REFILL TO ½ TO ¾ CAPACITY AT 1000 HOURS.
TURBO-SUPERCHARGER TACHOMETER TAKE-OFF DRIVE	TURBO-SUPERCHARGER	200	AN-G-3	LUBRICATE BEFORE REINSTALLATION, DUE TO INACCESSIBILITY OF ALEMITE FITTING. APPLY A VERY LIGHT COAT OR DRIVE WILL WHIP.
DYNAFOCALS	ENGINE MOUNT	AS REQ'D	POWDERED GRAPHITE	APPLY A SMALL AMOUNT OF POWDERED GRAPHITE TO THE SPLIT BALL JOINT OF DYNAFOCAL AS NECESSARY.
TURBO-SUPERCHARGER WASTE GATE LINKAGE	FORWARD OF OIL TANK	50	AN-O-6	APPLY A FEW DROPS OF OIL ON LINKAGE.

NACELLE LUBRICATION CHART

NAME	LOCATION	HOURLY PERIOD	LUBRICANT	INSTRUCTIONS
WING FLAP ACTUATING SCREW	WING FLAP	DAILY	AN-G-3	CLEAN THOROUGHLY AND APPLY A LIGHT COAT OF GREASE.
FLAP TRACK EXPOSED SURFACE	WING FLAP	DAILY		CLEAN THOROUGHLY. DO NOT LUBRICATE.
FLAP TRACK UPPER SURFACE	WING FLAP	DAILY	AN-G-3	CLEAN THOROUGHLY AND APPLY A LIGHT COAT OF GREASE.
FLAP SCREW SUPPORT ASSEMBLY	FLAP SCREW	25	AN-G-3	2 ZERK FITTINGS ON EACH ASSEMBLY.
FLAP TORQUE TUBE MAST	FLAP TORQUE TUBE	25	AN-G-3	2 ZERK FITTINGS ON EACH MAST ATTACHMENT.
(5) FLAP GEAR BOXES	WING	200	AN-G-3	CHECK LEVEL AND REFILL TO ⅓ CAPACITY AT 200 HOURS. FLUSH AND REFILL TO ⅓ CAPACITY AT 500 HOURS.
(16) FLAP ENCLOSED UNIVERSALS	FLAP ACTUATORS	200	AN-G-3	CLEAN AND REPACK BOOT AND UNIVERSAL JOINT. **CAUTION:** DO NOT OVER LUBRICATE.
AILERON ACTUATING ARM AND LINKAGE	AILERONS	50	AN-O-6	APPLY A FEW DROPS OF OIL ON LINKAGE.
AILERON CONTROL LOCK	WING CENTER SECTION REAR SPAR	50	AN-O-6	APPLY OIL ALONG LEVER ARM AND LOCK PIN. **WARNING:** DO NOT LUBRICATE THE ENGAGING AREA OF THE PINS.
AILERON TRIM TAB HINGES	AILERON TRIM TAB	50	AN-O-6	APPLY A FEW DROPS OF OIL ON THE PIANO TYPE HINGES.
AILERON TRIM TAB ACTUATING SCREW	AILERON TRIM TAB	200	AN-G-3	IT IS RECOMMENDED THAT THIS ACTUATING SCREW BE REMOVED FOR SERVICING. **PROCEDURE:** SET THE AILERON TAB CONTROL WHEEL ON THE PILOT'S CONTROL STAND TO NEUTRAL POSITION. REMOVE ACCESS DOOR TO TRIM TAB MECHANISM. REMOVE THE GREASE BOOT FROM THE UNIVERSAL. UNSCREW BOLT FROM END OF ACTUATING SCREW AT THE UNIVERSAL. BY REMOVING BOLT AND NUT FROM TRIM TAB TERMINAL, THE SCREW MAY BE EASILY REMOVED FROM AILERON. UNSCREW NUT FROM SCREW. CLEAN BOTH PARTS WITH WHITE UNLEADED GASOLINE. APPLY A LIGHT COAT OF GREASE. REASSEMBLE. **CAUTION:** TURN THE NUT WITH THE SCREW HELD IN A FIXED POSITION BY HAND UNTIL THE DESIRED LENGTH IS OBTAINED TO CONNECT THE SCREW TO THE TAB AT ITS NEUTRAL POSITION. THIS WILL CO-ORDINATE THE NEUTRAL POSITION OF THE TAB WITH THE CONTROL WHEEL ON THE PILOT'S STAND.
ENCLOSED UNIVERSAL TRIM TAB ACTUATOR	AILERON TRIM TAB	200	AN-G-3	CLEAN AND REPACK BOOT AND UNIVERSAL JOINT. THIS MAY BE DONE IN CONJUNCTION WITH THE SERVICING OF THE TRIM TAB ACTUATING SCREW. **CAUTION:** DO NOT OVER LUBRICATE.

WING LUBRICATION CHART

NAME	LOCATION	HOURLY PERIOD	LUBRICANT	INSTRUCTIONS
PILOT'S AND CO-PILOT'S CONTROL COLUMNS	FORWARD CABIN	200	AN-G-3	THOROUGHLY CLEAN SPROCKET AND CHAIN. APPLY A LIGHT COAT OF GREASE.
RUDDER PEDALS	FORWARD CABIN	50	AN-G-3	12 ZERK FITTINGS.
DOORS, WINDOWS, LATCHES, SLIDING SURFACE EXITS, CAMERA WELL DOORS	BODY	25	AN-O-6	APPLY A FEW DROPS OF OIL ON HINGES, LATCHES, AND OTHER MOVING SURFACES.
TRAILING ANTENNA	FORWARD BOMB BAY	50	AN-O-6	APPLY A FEW DROPS OF OIL ON THE WEIGHT SWIVEL ASSEMBLY.
ARMAMENT: **A. TURRETS** **B. SIGHTS**	BODY			LUBRICATE IN ACCORDANCE WITH A.A.F. ARMAMENT LUBRICATION PROCEDURE.
BOMB CONTROL UNIT	BODY CENTER LINE ON WING CENTER SECTION	200	AN-G-3	CHECK LEVEL AND REFILL TO 1/3 CAPACITY AT 200 HOURS. FLUSH AND REFILL TO 1/3 CAPACITY AT 500 HOURS.
BOMB DOOR RETRACTING SCREWS	FORWARD AND AFT BOMB BAYS	200	AN-G-3	REMOVE SCREW ASSY., DISASSEMBLE AND LUBRICATE MECHANISM. REASSEMBLE AND SERVICE SNUBBER CYLINDER WITH HYDRAULIC FLUID SPEC. 3580 (RED COLOR). WITH PISTON FULLY EXTENDED AND OPERATOR IN VERTICAL POSITION, FILL TO WITHIN 4.0" ± .10" OF UPPER END OF SCREW.
BOMB DOOR GEAR BOXES	FORWARD AND AFT BOMB BAYS	200	AN-G-3	CHECK LEVEL AND REFILL TO 1/3 CAPACITY AT 200 HOURS. FLUSH AND REFILL TO 1/3 CAPACITY AT 500 HOURS.
BOMB DOOR ENCLOSED UNIVERSALS	ON TORQUE TUBES	200	AN-G-3	CLEAN AND REPACK BOOT AND UNIVERSAL. **CAUTION:** DO NOT OVER LUBRICATE.
TAIL SKID DRAG STRUT	TAIL SKID	25	AN-G-3	2 ZERK FITTINGS.
YOKE ATTACHMENT TO SKID	TAIL SKID	25	AN-G-3	1 ZERK FITTING.
TAIL SKID YOKE TO SHOCK STRUT	TAIL SKID	25	AN-G-3	2 ZERK FITTINGS.
TAIL SKID SHOCK STRUT TO RETRACTION SCREW	TAIL SKID	25	AN-G-3	1 ZERK FITTING.
TAIL SKID RETRACTING SCREW	TAIL SKID	100	AN-G-10	TO GAIN ACCESS, REMOVE WOOD FLOOR ABOVE SCREW. REMOVE SCREW HOUSING TO EXPOSE SCREW. APPLY A LIGHT COAT OF GREASE OVER SCREW.
TAIL SKID GEAR BOX	TAIL SKID	200	AN-G-3	CHECK LEVEL AND REFILL TO 1/3 CAPACITY AT 200 HOURS. FLUSH AND REFILL TO 1/3 CAPACITY AT 500 HOURS.

BODY LUBRICATION CHART

NAME	LOCATION	HOURLY PERIOD	LUBRICANT	LOCATION
ELEVATOR CONTROL LOCK	ELEVATOR QUADRANT	50	AN-O-6	APPLY A FEW DROPS OF OIL ON LEVER ARM AND LOCK PIN. **WARNING:** DO NOT LUBRICATE THE ENGAGING AREA OF THE PIN.
ELEVATOR TRIM TAB HINGES	ELEVATOR TRIM TAB	50	AN-O-6	APPLY A FEW DROPS OF OIL ON THE PIANO TYPE HINGES.
ELEVATOR TRIM TAB MAST	ELEVATOR TRIM TAB	50	AN-G-3	I ZERK FITTING.
ELEVATOR TRIM TAB ACTUATING SCREW	ELEVATOR TRIM TAB	200	AN-G-3	SIMILAR TO AILERON TRIM TAB ACTUATING SCREW LUBRICATION PROCEDURE.
TRIM TAB ACTUATOR ENCLOSED UNIVERSAL	ELEVATOR TRIM TAB	200	AN-G-3	ACCESSIBLE THROUGH ACCESS DOOR. CLEAN AND REPACK BOOT AND UNIVERSAL JOINT. THIS MAY BE DONE IN CONJUNCTION WITH THE SERVICING OF THE ACTUATING SCREW. **CAUTION:** DO NOT OVER LUBRICATE.
RUDDER CONTROL LOCK	RUDDER QUADRANT	50	AN-O-6	APPLY A FEW DROPS OF OIL ON LEVER ARM AND LOCK PIN. **WARNING:** DO NOT LUBRICATE THE ENGAGING AREA OF THE PIN.
RUDDER TRIM TAB HINGES	RUDDER TRIM TAB	50	AN-O-6	APPLY A FEW DROPS OF OIL ON THE PIANO TYPE HINGES.
RUDDER TRIM TAB MAST	RUDDER TRIM TAB	50	AN-G-3	I ZERK FITTING.
RUDDER TRIM TAB ACTUATING SCREW	RUDDER TRIM TAB	200	AN-G-3	SIMILAR TO AILERON TRIM TAB ACTUATING SCREW LUBRICATION PROCEDURE.
RUDDER TRIM TAB EXPOSED UNIVERSAL	AT THE RUDDER HINGE LINE	50	AN-O-6	ACCESSIBLE THROUGH ACCESS DOOR. APPLY A FEW DROPS OF OIL ON UNIVERSAL.
RUDDER CONTROL ENCLOSED UNIVERSAL	AT THE RUDDER LOWER HINGE	200	AN-G-3	CLEAN AND REPACK BOOT AND UNIVERSAL. **CAUTION:** DO NOT OVER LUBRICATE.
CONTROL CABLES			AN-G-3	CONTROL CABLES ARE TO BE LUBRICATED **ONLY** TO REDUCE OPERATING FRICTION LOADS. IF REQUIRED, GREASE LIGHTLY. ELIMINATE LUBRICATION ENTIRELY IN DUSTY CLIMATES AS DUST AND GREASE WILL INCREASE FRICTION LOADS. CLEAN FREQUENTLY TO PREVENT ACCUMULATION OF DIRT AND GREASE.
MISCELLANEOUS LINKAGE SYSTEMS		50	AN-O-6	CLEAN THOROUGHLY AND APPLY A FEW DROPS OF OIL.

BODY LUBRICATION CHART

FLYAWAY EQUIPMENT

ITEM	PART No.	NAME	QUANTITY	USE
1	F50800	NACELLE SERVICING LADDER	1 Set	ACCESS TO ENGINE AND NACELLE
2	F51100	(DELETED 10-7-43)		LIFTING ASSEMBLED ENGINE OR PROPELLER
3	F51601	LEFT HAND NACELLE SUPPORT PAD	1	JACKING POINT FOR NACELLES
4	F51602	RIGHT HAND NACELLE SUPPORT PAD	1	JACKING POINT FOR NACELLES
5	F61100	(DELETED 10-30-43)	1	HAND OPERATION OF BOMB DOORS
6	F61501	CLEARANCE GAGE	1	TURBO WHEEL AND NOZZLE BOX CLEARANCE
7	F61502	CLEARANCE GAGE	1	TURBO WHEEL AND COOLING CAP CLEARANCE
8	F63000	WING JACKING PAD	4	JACKING POINTS FOR WINGS
9	F63100	MOORING EYE	2	MOORING ROPE ATTACHMENT POINTS
10	F62401	SPANNER WRENCH	1	REMOVAL OF 20 MILLIMETER CANNON
11	F62501	OPEN END WRENCH	1	ADJUSTMENT OF .50 CALIBER GUN MOUNT
12	F63800	HAND CRANK ADAPTER	1	SETTING BOMB DOOR AND FLAP TRAVEL LIMITS
13	F63900	SPECIAL TOOLS CONTAINER	1	CANVAS CONTAINER FOR SMALL TOOLS

TOOL DRAWINGS

ITEM	PART No.	DESCRIPTION
1	F50000	NOSE WHEEL TOWING BAR
2	F50100	ENGINE NACELLE SUPPORT (SET OF 2)
3	F50300	INBOARD WING PANEL SLING
4	F50400	OUTBOARD WING PANEL SLING
5	F50500	QUICK CHANGE ENGINE UNIT SLING
6	F50600	HORIZONTAL STABILIZER OR EMPENNAGE UNIT SLING
7	F50700	VERTICAL STABILIZER SLING
8	F50800	NACELLE SERVICING LADDER
9	F51100	ENGINE AND PROPELLER HOIST
10	F51201	LANDING GEAR WHEEL SKATE (SET OF 2)
11	F51300	MAIN LANDING GEAR OLEO DOLLY
12	F51601	LEFT HAND NACELLE SUPPORT PAD
13	F51602	RIGHT HAND NACELLE SUPPORT PAD
14	F60001	INTERNAL WRENCH (FOR FUEL TANK AND WING JOINT BOLTS)
15	F60002	INTERNAL WRENCH (FOR FUEL TANK AND WING JOINT BOLTS)
16	F60003	INTERNAL WRENCH (FOR WING JOINT BOLTS)
17	F60201	TWO-LUG SOCKET WRENCH (FOR BOMB DOOR AND FLAP CONTROL GEAR BOX)
18	F60202	TWO-LUG SOCKET WRENCH (FOR BOMB DOOR AND MAIN LANDING GEAR DOOR SHAFTS)
19	F60203	TWO-LUG SOCKET WRENCH (FOR FLAP OPERATING MECHANISM)
20	F60204	TWO-LUG SOCKET WRENCH (FOR FLAP OPERATING MECHANISM)
21	F60205	TWO-LUG SOCKET WRENCH (FOR FLAP MECHANISM RETAINER AND DOOR OPERATING NUT)
22	F60206	TWO-LUG SOCKET WRENCH (FOR FLAP MECHNISM AND DOOR OPERATING NUT)
23	F60207	TWO-LUG SOCKET WRENCH (FOR FLAP MECHANISM RETAINER ASSEMBLY)
24	F60300	CARBURETOR FILTER WRENCH
25	F60401	HOOK SPANNER WRENCH (FLAP OPERATING MECHANISM FOR SLEEVE)
26	F60402	HOOK SPANNER WRENCH (FOR BOMB AND NACELLE DOOR GEAR BOX)
27	F60403	HOOK SPANNER WRENCH (FOR TAIL SKID OLEO LOCK RING)
28	F60501	TWO-LUG SPANNER WRENCH (FOR PACKING GLAND ADAPTER ON BOMB AND NACELLE DOORS)

SPECIAL TOOLS FOR THE B-29 AIRPLANE

TOOL DRAWINGS

ITEM	PART No.	DESCRIPTION
29	F60601	TWO-PEG SPANNER WRENCH (FOR BOMB DOOR AND MAIN LANDING GEAR OPERATING SHAFTS)
30	F60800	NOSE WHEEL LINK SCISSORS
31	F60900	MAIN WHEEL LINK SCISSORS (SET OF 2)
32	F61200	WRENCH FOR INTERNAL WRENCHING BOLT FOR MAIN SHOCK STRUT BOLTS, 1-inch
33	F61300	WRENCH FOR INTERNAL WRENCHING BOLT FOR NOSE WHEEL SHOCK STRUT BOLTS, $\frac{7}{8}$-inch
34	F61800	WRENCH—SPANNER RETRACTING SCREW RETAINER CAPS & NUTS
35	F62101	PILOT SPANNER WRENCH FOR MAIN LANDING GEAR RETRACTING STRUT
36	F62102	PILOT SPANNER WRENCH (FOR NOSE LANDING GEAR RETRACTING STRUT)
37	F62201	TWO-LUG SPANNER WRENCH (FOR MAIN LANDING GEAR PACKING NUT)
38	F62202	TWO-LUG SPANNER WRENCH (FOR NOSE LANDING GEAR PACKING NUT)
39	F62203	TWO-LUG SPANNER WRENCH (FOR TAIL SKID OLEO PACKING NUT)
40	F62301	SOCKET WRENCH (FOR MAIN LANDING GEAR PISTON NUT)
41	F62302	SOCKET WRENCH (FOR NOSE LANDING GEAR PISTON NUT)
42	F62303	SOCKET WRENCH (FOR NOSE GEAR SHIMMY DAMPENER)
43	F62701	SOCKET WRENCH (FOR MAIN LANDING GEAR HUB NUT)
44	F62702	SOCKET WRENCH (FOR NOSE LANDING GEAR HUB NUT)
45	F62901	ALIGNING PIN (FOR FUEL TANK VENT FITTING)
46	F62902	ALIGNING PIN (FOR FUEL TANK INTERCONNECTING FITTING)
47	F62903	ALIGNING PIN (FOR FUEL TANK FILLER NECK)
48	F63000	WING JACKING PAD (SET OF 4)
49	F63100	MOORING EYE (SET OF 2)
50	F63401	DOUBLE HEAD OPEN END WRENCH, $1\frac{7}{8}$-inch, $1\frac{13}{16}$-inch
51	F63402	DOUBLE HEAD OPEN END WRENCH, $1\frac{15}{16}$-inch, $1\frac{7}{8}$-inch
52	F63403	DOUBLE HEAD OPEN END WRENCH, 2-inch, $1\frac{15}{16}$-inch.
53	F63404	DOUBLE HEAD OPEN END WRENCH, $2\frac{1}{16}$-inch, 2-inch
54	F63405	DOUBLE HEAD OPEN END WRENCH, $2\frac{1}{8}$-inch, $2\frac{1}{16}$-inch
55	F63406	DOUBLE HEAD OPEN END WRENCH, $2\frac{1}{8}$-inch, $2\frac{3}{16}$-inch
56	F63407	DOUBLE HEAD OPEN END WRENCH, $2\frac{1}{4}$-inch, $2\frac{3}{16}$-inch
57	F63408	DOUBLE HEAD OPEN END WRENCH, $2\frac{5}{16}$-inch, $2\frac{1}{4}$-inch

SPECIAL TOOLS FOR THE B-29 AIRPLANE

TOOL DRAWINGS

ITEM	PART No.	DESCRIPTION
58	F62000	WRENCH—SPANNER ADJUSTABLE "V"
59	F63409	DOUBLE HEAD OPEN END WRENCH, 2⅜-inch, 2 5/16-inch
60	F63410	DOUBLE HEAD OPEN END WRENCH, 2 7/16-inch, 2⅜-inch
61	F63411	DOUBLE HEAD OPEN END WRENCH, 2½-inch, 2 7/16-inch
62	F63412	DOUBLE HEAD OPEN END WRENCH, 2 9/16-inch, 2½-inch
63	F63413	DOUBLE HEAD OPEN END WRENCH, 1⅝-inch, 2 9/16-inch
64	F63501	ALIGNING PIN (FOR WING JOINTSTATION 510)
65	F11100	LANDING GEAR WHEEL CARRIER
66	F21901	CROWFOOT WRENCH — 12 POINT /16-inch
67	F21902	CROWFOOT WRENCH — 12 POINT, ⅝-inch
68	F21903	CROWFOOT WRENCH — 12 POINT, 11/16-inch
69	F21912	CROWFOOT WRENCH — 12 POINT, ¾-inch
70	F21913	CROWFOOT WRENCH — 12 POINT, 13/16-inch
71	F21904	CROWFOOT WRENCH — 12 POINT, ⅞-inch
72	F21914	CROWFOOT WRENCH — 12 POINT, 15/16-inch
73	F21905	CROWFOOT WRENCH — 12 POINT, 1-inch
74	F21915	CROWFOOT WRENCH — 12 POINT, 1 1/16-inch
75	F21916	CROWFOOT WRENCH — 12 POINT, 1⅛-inch
76	F21906	CROWFOOT WRENCH — 12 POINT, 1 3/16-inch
77	F21917	CROWFOOT WRENCH — 12 POINT, 1¼-inch
78	F21918	CROWFOOT WRENCH — 12 POINT, 1 5/16-inch
79	F21919	CROWFOOT WRENCH — 12 POINT, 1⅜-inch
80	F21907	CROWFOOT WRENCH — 12 POINT, 1½-inch
81	F21920	CROWFOOT WRENCH — 12 POINT, 1 9/16-inch
82	F21921	CROWFOOT WRENCH — 12 POINT, 1¾-inch
83	F21908	CROWFOOT WRENCH — 12 POINT, 1 15/16-inch
84	F21922	CROWFOOT WRENCH — 12 POINT, 2-inch
85	F21923	CROWFOOT WRENCH — 12 POINT, 2¼-inch
86	F21924	CROWFOOT WRENCH — 12 POINT, 2 5/16-inch

SPECIAL TOOLS FOR THE B-29 AIRPLANE

		TOOL DRAWINGS
ITEM	**PART No.**	**DESCRIPTION**
87	F52000	TAIL TURRET DOLLY
88	F52100	TAIL TURRET SLING
89	F62401	SPANNER WRENCH (FOR 20 MILLIMETER CANNON)
90	F62501	OPEN END WRENCH (FOR .50 CALIBER GUN)
91	F60005	WRENCH—INTERNAL FUEL TANK & WING JOINT BOLTS
92	F60006	WRENCH—INTERNAL FUEL TANK & WING JOINT BOLTS
93	F60007	WRENCH—INTERNAL WING JOINT BOLTS
94	F60008	WRENCH FOR ¾ INTERNAL WRENCHING BOLT
95	F61401	ADAPTER TORQUE WRENCH 9/16 NUT
96	F61402	ADAPTER TORQUE WRENCH ⅝ NUT
97	F61403	ADAPTER TORQUE WRENCH ¾ NUT
98	F61404	ADAPTER TORQUE WRENCH ⅞ NUT
99	F61601	ADAPTER TORQUE WRENCH ½ SQ. DRIVE
100	F61501	CLEARANCE GAGE (FOR TURBO WHEEL AND NOZZLE BOX)
101	F61502	CLEARANCE GAGE (FOR TURBO WHEEL AND COOLING CAP)
102	F62600	CLAMP—HORIZONTAL STABILIZER
103	F63200	WRENCH—GENERATOR
104	F63300	WRENCH—STARTER
105	F63701	WRENCH—PLUG M.L.G. RETRACTING GEAR SHAFT
106	F63702	WRENCH—PLUG NOSE L.G. RETRACTING GEAR SHAFT
107	F63800	ADAPTER—HAND CRANK
108	F64000	COMPRESSOR—NOSE L.G. COMPRESSION SPRING ASSY.
109	F64101	PIN—STABILIZER ALIGNING
110	F64102	PIN—STABILIZER ALIGNING
111	F64103	PIN—VERTICAL FIN ALIGNING
112	F64700	WRENCH—NOSE & MAIN OLEO PISTON
113	F64801	WRENCH—4 PEG M.L.G. & NOSE L.G. RETRACT SCW. GEAR
114	F64802	WRENCH—4 PEG FLAP MECH. & DOOR OPERATING GEARS
115	F64900	TOOL ASSY. 20MM CHARGING

SPECIAL TOOLS FOR THE B-29 AIRPLANE